

Trio V2 100

Low noise extract axial fan

- Casing material: Plastic
- Backdraft protection: Backdraft damper

	Unit of measurement	Trio V2 100	
Speed	-	1	2
Minimum supply voltage	V	220	
Maximum supply voltage	V	240	
Power supply frequency	Hz	50	
Maximum airflow	m³/h	54	81
Weight	kg	0.55	
Ambient air temperature min	°C	1	
Ambient air temperature max	°C	40	
Ingress protection rating	-	IP44	
Impeller material	-	Plastic	

Dimensions

a	c	Ø d	e
150	79	99	23

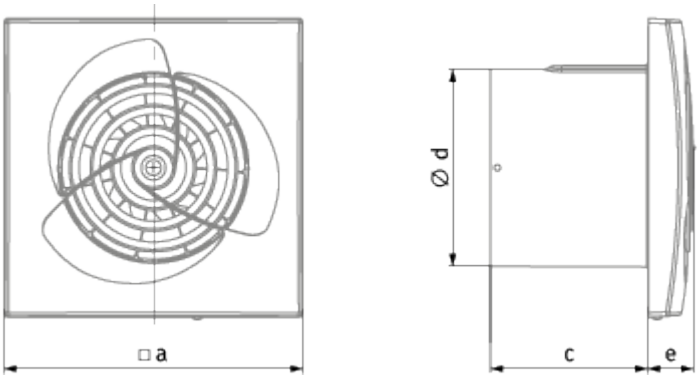
□a
Ø d
c
e

Ecodesign

Trademark	Blauberg					
Model	Trio V2 100					
Specific energy consumption (SEC) (kWh/(m²/a))	Cold		Average		Warm	
	-30.7	B	-14.3	E	-4.9	F
Type of ventilation unit	Unidirectional					
Type of drive installed	2-speed					
Type of heat recovery system	None					
Maximum flow rate (m³/h)	81					
Electric power input (W)	8					
Reference flow rate (m³/s)	0.015					
Specific power input (SPI) (W/(m³/h))	0.093					
Control typology	Manual control					
Maximum external leakage rates (%)	2.7					
Declared typology	RVU UVU					
Sound power level (dB(A))	43					
The annual electricity consumption (AEC) (kWh/a)	Cold		Average		Warm	
	116		116		116	
The annual heating saved (AHS) (kWh/a)	Cold		Average		Warm	
	3355		1715		776	