

# Trio One EC

Silent extract fan with an EC motor

- Impeller type: Mixed-flow
- Casing material: Plastic
- Backdraft protection: Backdraft damper

| | Unit of measurement | Trio One EC |
|---|---|---|
| Maximum supply voltage | V | 240 |
| Minimum supply voltage | V | 220 |
| Power supply frequency | Hz | 50/60 |
| Maximum airflow | $m^3/h$ | 95 |
| Ingress protection rating | - | IP44 Zone 1 |
| Impeller material | - | Plastic |

## Dimensions

| Ø D | H | L | L1 |
|---|---|---|---|
| 99 | 160 | 79 | 19 |

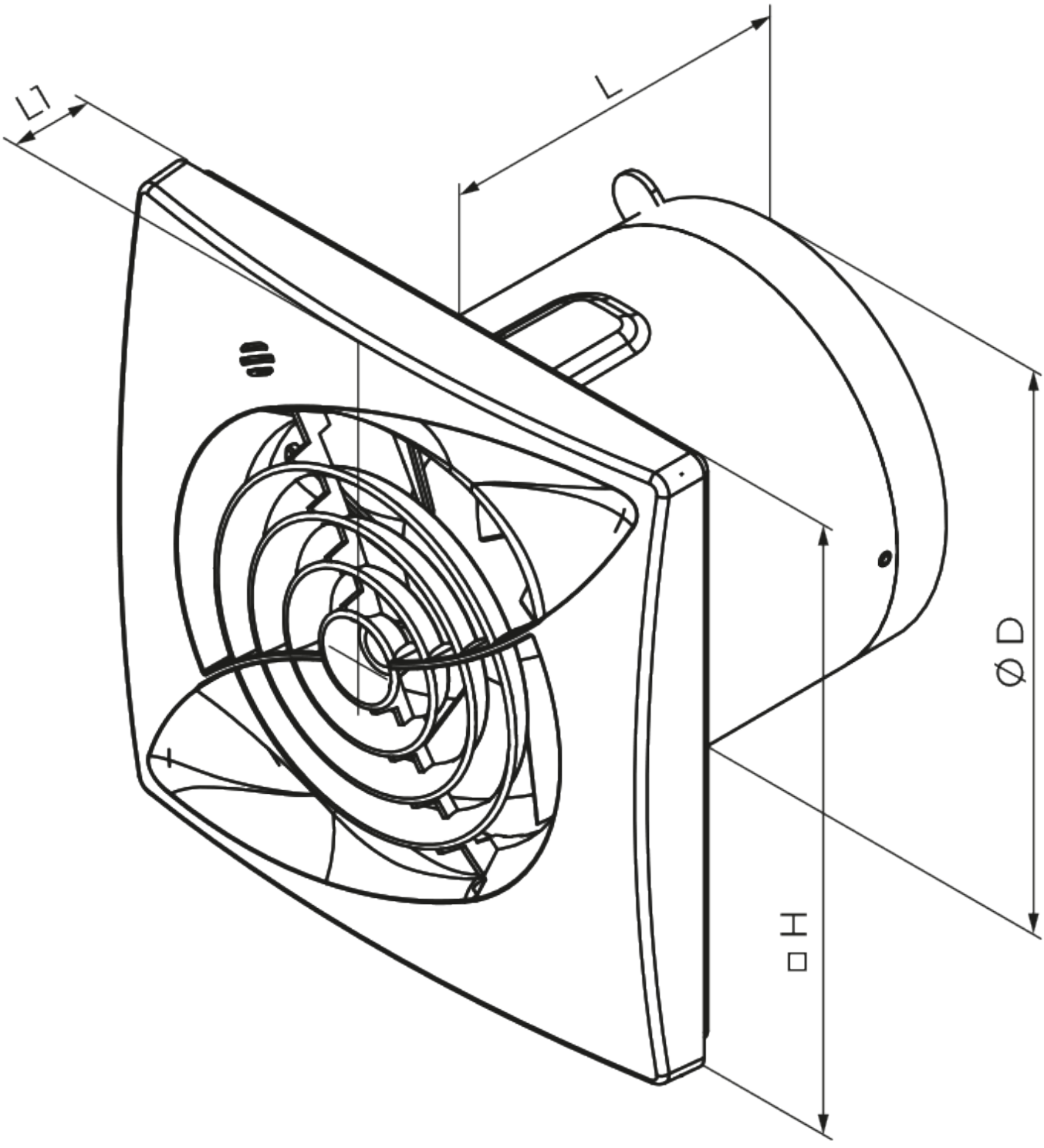
L1
L
Ø D
□H