

Trio 150 S

Low noise extract axial fan

- Casing material: Plastic
- Backdraft protection: Backdraft damper
- Pull cord

	Unit of measurement	Trio 150 S
Minimum supply voltage	V	220
Maximum supply voltage	V	240
Power supply frequency	Hz	50
Maximum airflow	m³/h	255
Weight	kg	0.97
Ambient air temperature min	°C	1
Ambient air temperature max	°C	40
Ingress protection rating	-	IP44
Impeller material	-	Plastic

Dimensions

a	c	Ø d	e
206	100	148	23

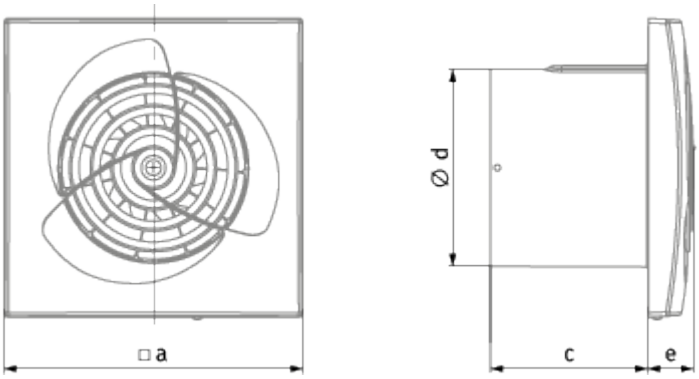
□a
Ø d
c
e

Ecodesign

Trademark	Blauberg					
Model	Trio 150 S					
Specific energy consumption (SEC) (kWh/(m²/a))	Cold		Average		Warm	
	-30.1	B	-13.7	E	-4.3	F
Type of ventilation unit	Unidirectional					
Type of drive installed	Single speed					
Type of heat recovery system	None					
Maximum flow rate (m³/h)	255					
Electric power input (W)	28					
Reference flow rate (m³/s)	0.05					
Specific power input (SPI) (W/(m³/h))	0.11					
Control typology	Manual control					
Maximum external leakage rates (%)	2.7					
Declared typology	RVU UVU					
Sound power level (dB(A))	55					
The annual electricity consumption (AEC) (kWh/a)	Cold		Average		Warm	
	138		138		138	
The annual heating saved (AHS) (kWh/a)	Cold		Average		Warm	
	3355		1715		776	