

Trio 150 H

Low noise extract axial fan

- Casing material: Plastic
- Backdraft protection: Backdraft damper
- Humidity sensor
- Timer: Turn off timer

	Unit of measurement	Trio 150 H
Minimum supply voltage	V	220
Maximum supply voltage	V	240
Power supply frequency	Hz	50
Maximum airflow	m³/h	255
Weight	kg	0.97
Ambient air temperature min	°C	1
Ambient air temperature max	°C	40
Ingress protection rating	-	IP44
Impeller material	-	Plastic

Dimensions

a	c	Ø d	e
206	100	148	23

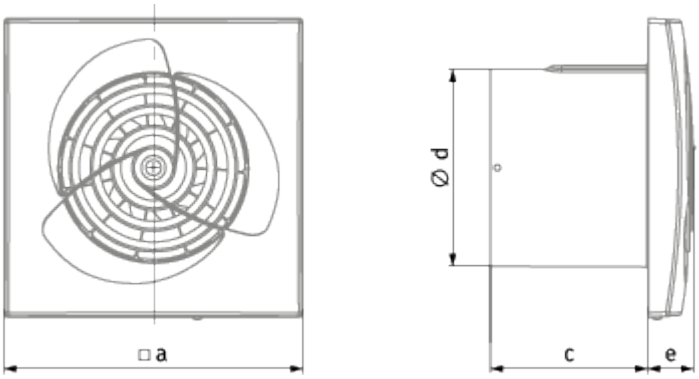
□a
Ø d
c
e

Ecodesign

Trademark	Blauberg					
Model	Trio 150 H					
Specific energy consumption (SEC) (kWh/(m²/a))	Cold		Average		Warm	
	-53.1	A+	-26.1	B	-10.6	E
Type of ventilation unit	Unidirectional					
Type of drive installed	Single speed					
Type of heat recovery system	None					
Maximum flow rate (m³/h)	255					
Electric power input (W)	28					
Reference flow rate (m³/s)	0.05					
Specific power input (SPI) (W/(m³/h))	0.11					
Control typology	Local demand control					
Maximum external leakage rates (%)	2.7					
Declared typology	RVU UVU					
Sound power level (dB(A))	55					
The annual electricity consumption (AEC) (kWh/a)	Cold		Average		Warm	
	89		89		89	
The annual heating saved (AHS) (kWh/a)	Cold		Average		Warm	
	5536		2830		1280	