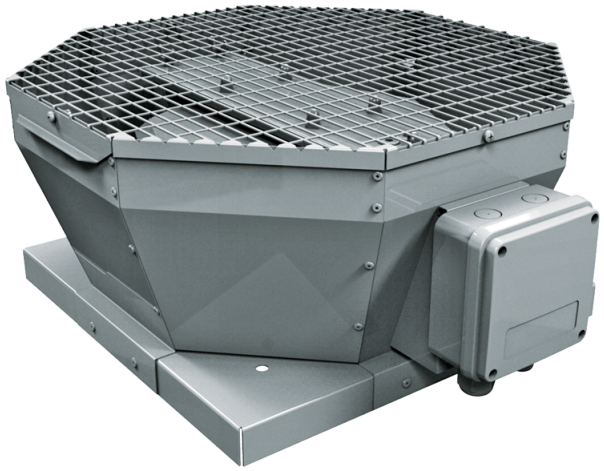

Tower-V EC 630

Roof centrifugal fans with vertical air discharge with EC-motors

• Impeller type: Centrifugal impeller with backward curved blades
• Casing material: Coated steel

	Unit of measurement	Tower-V EC 630
Phases	-	3
Minimum supply voltage	V	400
Maximum supply voltage	V	400
Power supply frequency	Hz	50/60
Maximum airflow	m^3/h	18270
Weight	kg	101
Transported air temperature (max)	°C	55
Transported air temperature (min)	°C	-25
Ingress protection rating	-	IPX4
Ingress protection rating of the drive	-	IP54
Impeller material	-	Plastic
Size	mm	630

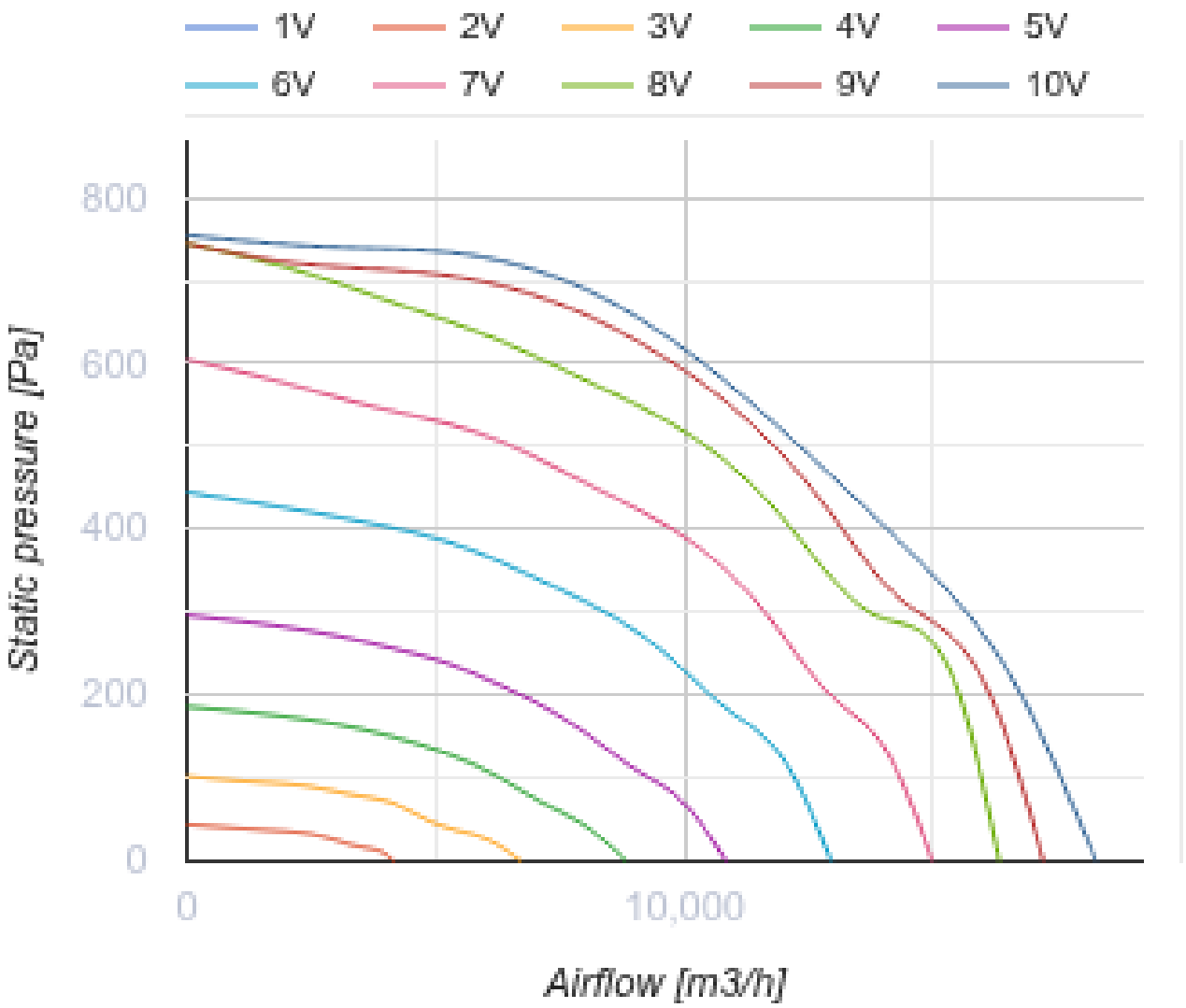
1V
2V
3V
4V
5V
6V
7V
8V
9V
10V
800
600
400
200
0
Static pressure [Pa]
0
10,000
Airflow [m3/h]

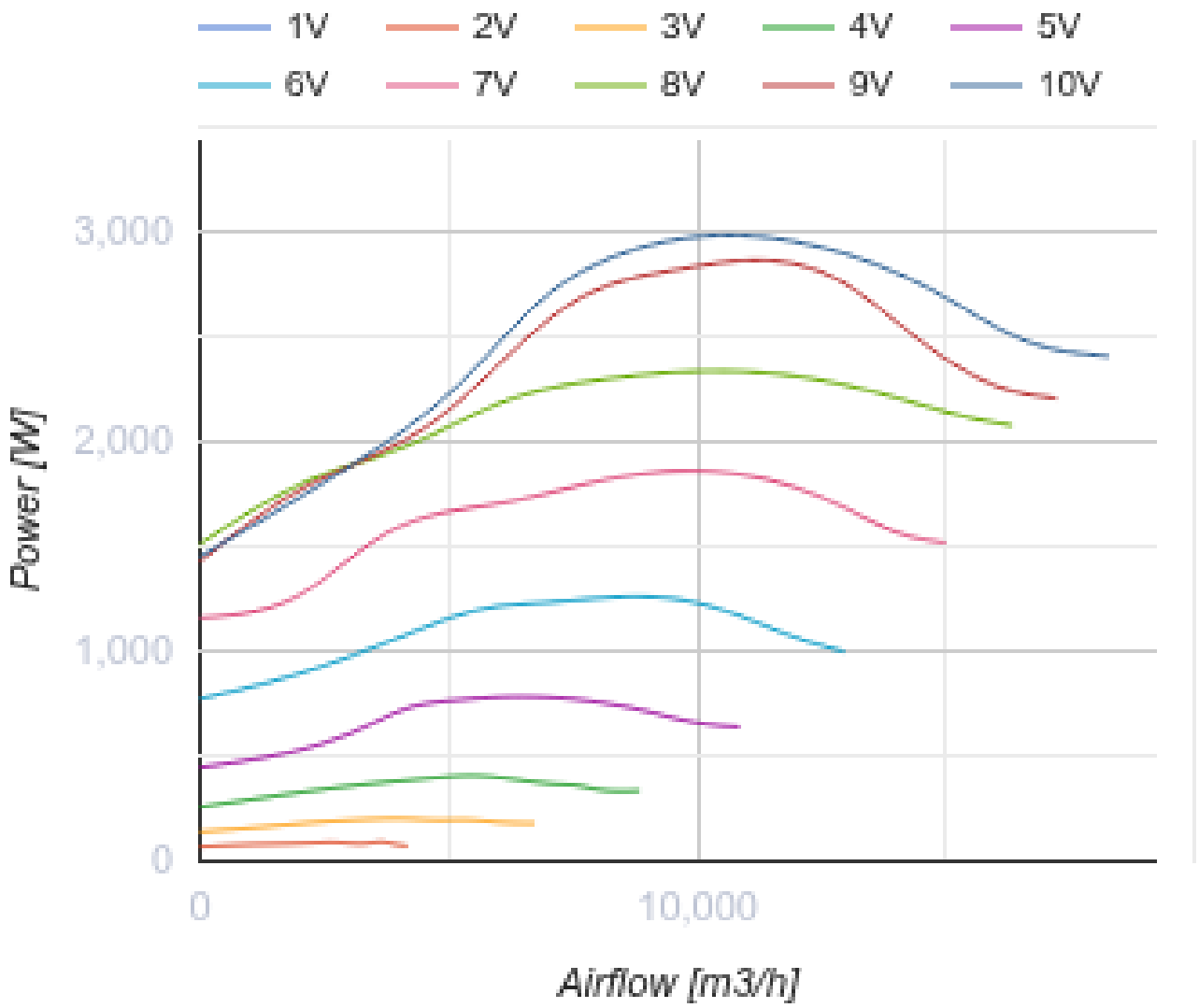

Dimensions

L	L1	H	L2
951	890	530	53

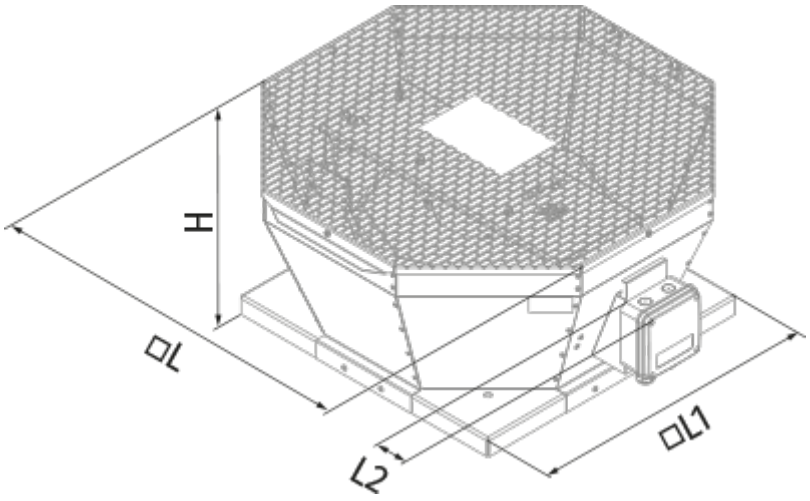
H
ØL
L2
ØL1

Ecodesign

Trademark	Blauberg
Model	Tower-V EC 630
Type of ventilation unit	Unidirectional
Type of drive installed	Integrated VSD
Type of heat recovery system	None
Nominal external pressure (Pa)	465
Maximum external leakage rates (%)	2.7
Static efficiency (%)	62.1
Declared typology	NRVU UVU
Effective electric power input (kW)	2.901
Sound power level (dB(A))	91

Accessories

EC motors regulators

Name	Photo	Description
CDT E/0-10		Speed control for EC motors