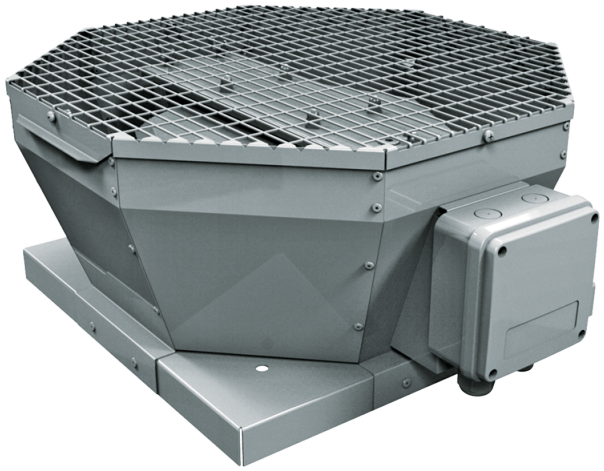

Tower-V EC 310

Roof centrifugal fans with vertical air discharge with EC-motors

• Impeller type: Centrifugal impeller with backward curved blades
• Casing material: Coated steel

	Unit of measurement	Tower-V EC 310
Phases	-	1
Maximum supply voltage	V	230
Minimum supply voltage	V	230
Power supply frequency	Hz	50/60
Maximum airflow	m^3/h	3100
Weight	kg	16
Transported air temperature (max)	°C	60
Transported air temperature (min)	°C	-20
Ingress protection rating	-	IPX4
Ingress protection rating of the drive	-	IP54
Impeller material	-	Aluminium
Size	mm	310

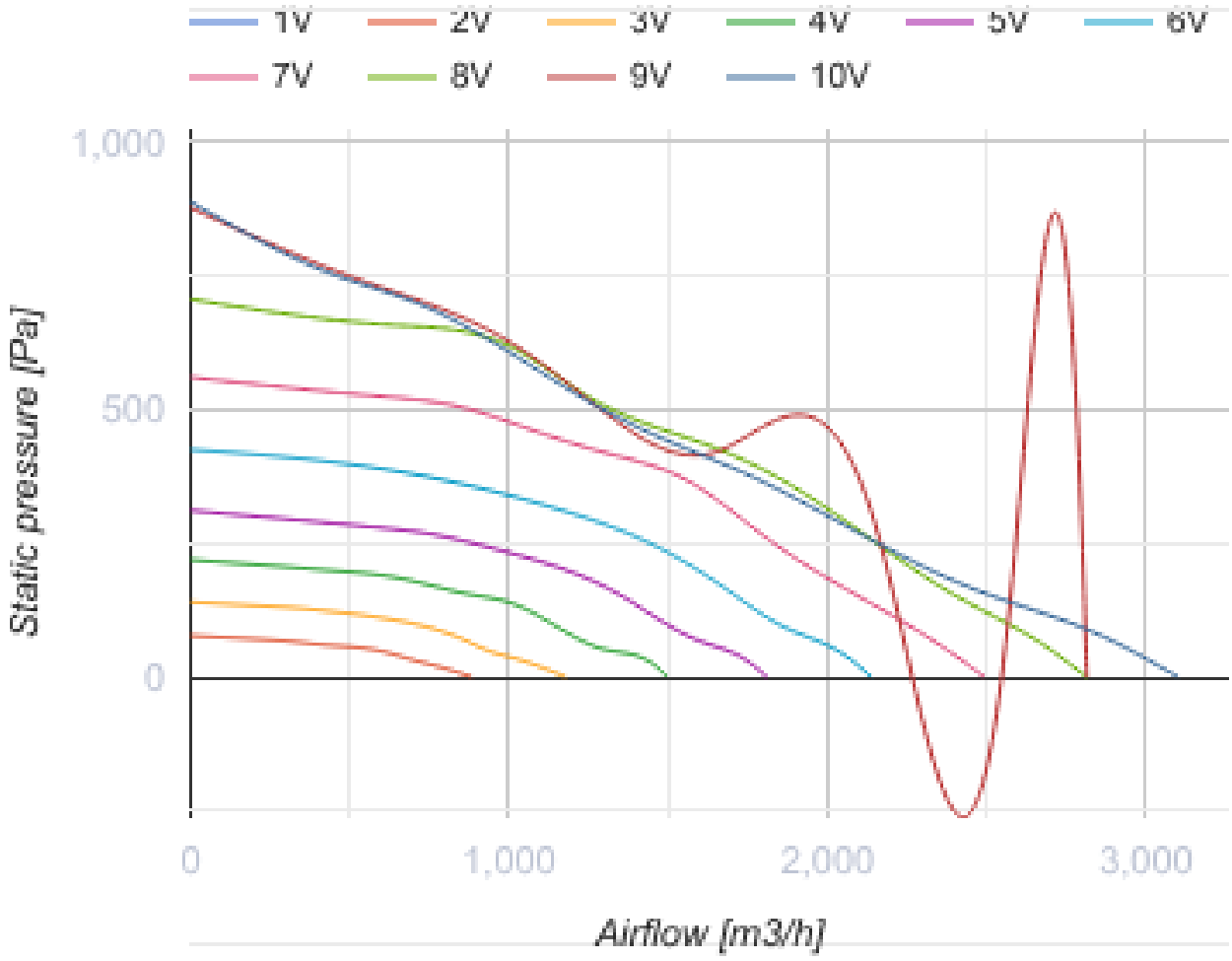
1V
2V
3V
4V
5V
6V
7V
8V
9V
10V
1,000
500
0
Static pressure [Pa]
0
1,000
2,000
3,000
Airflow [m3/h]

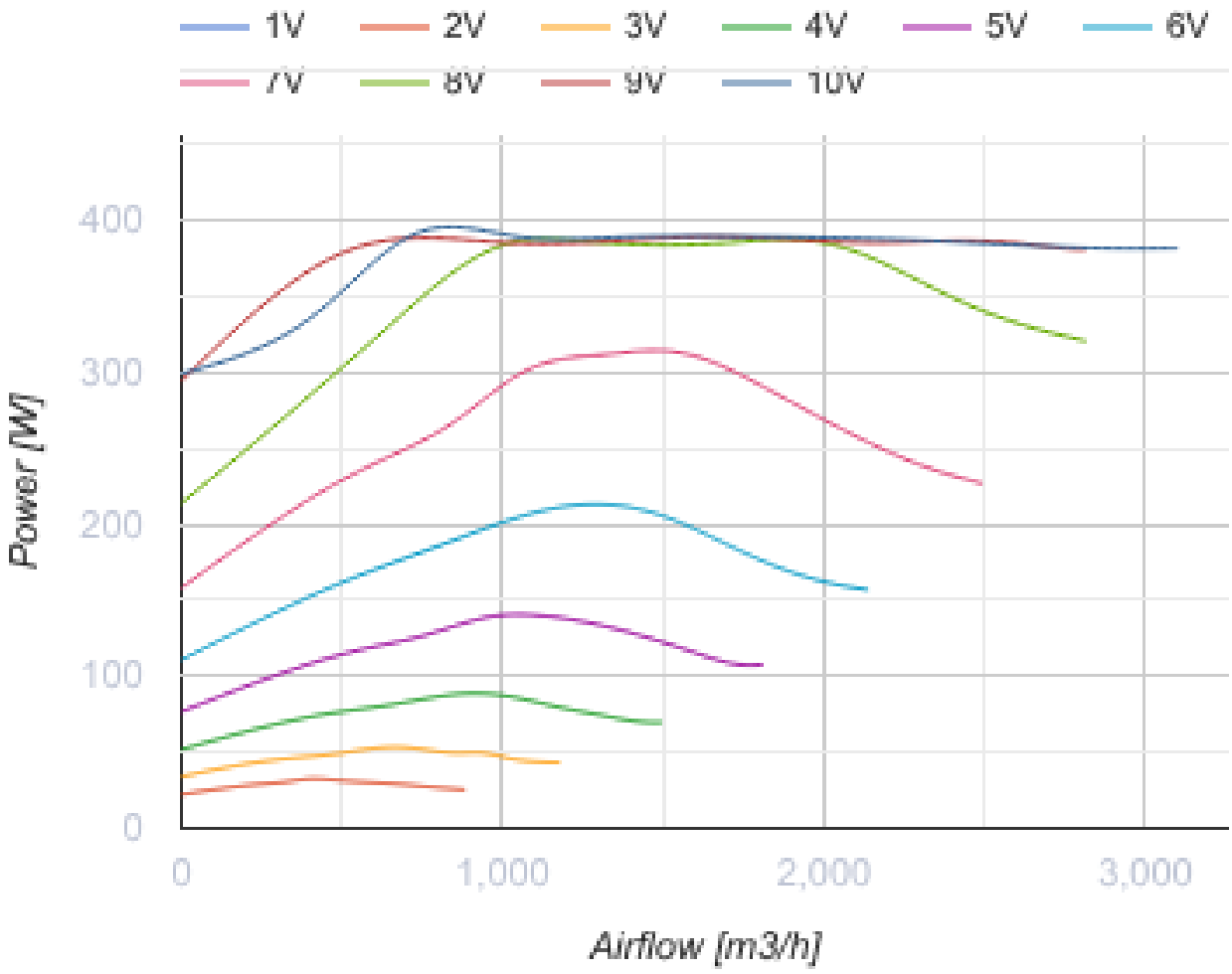

Dimensions

L	L1	H	L2
613	477	296	53

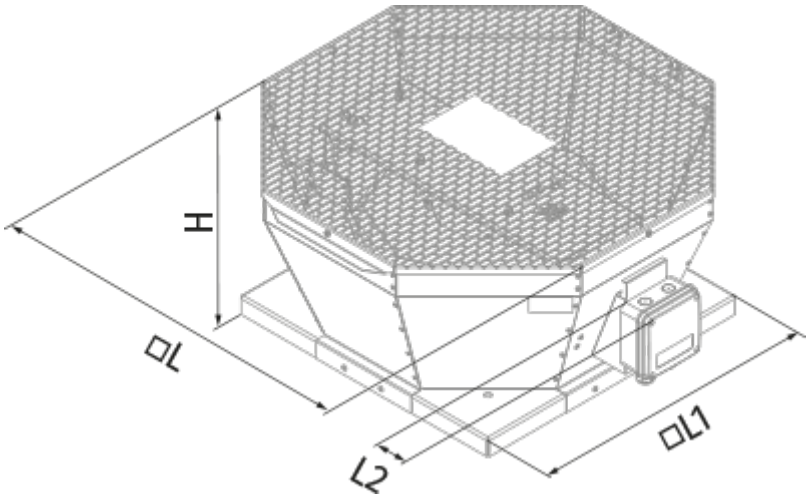
H
ØL
L2
ØL1

Ecodesign

Trademark	Blauberg
Model	Tower-V EC 310
Type of ventilation unit	Unidirectional
Type of drive installed	Integrated VSD
Type of heat recovery system	None
Nominal external pressure (Pa)	470
Maximum external leakage rates (%)	2.7
Static efficiency (%)	59.2
Effective electric power input (kW)	0.48
Sound power level (dB(A))	68
Declared typology	NRVU UVU

Accessories

EC motors regulators

Name	Photo	Description
CDT E/0-10		Speed control for EC motors