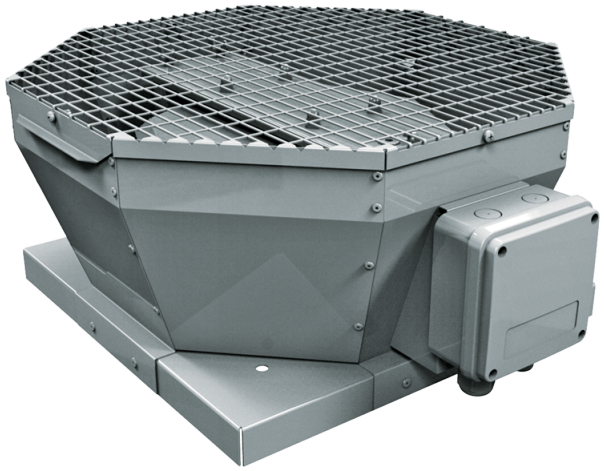

Tower-V EC 225

Roof centrifugal fans with vertical air discharge with EC-motors

• Impeller type: Centrifugal impeller with backward curved blades
• Casing material: Coated steel

	Unit of measurement	Tower-V EC 225
Phases	-	1
Minimum supply voltage	V	230
Maximum supply voltage	V	230
Power supply frequency	Hz	50/60
Maximum airflow	m^3/h	1290
Weight	kg	8
Transported air temperature (max)	°C	60
Transported air temperature (min)	°C	-25
Ingress protection rating	-	IPX4
Ingress protection rating of the drive	-	IP55
Impeller material	-	Plastic
Size	mm	225

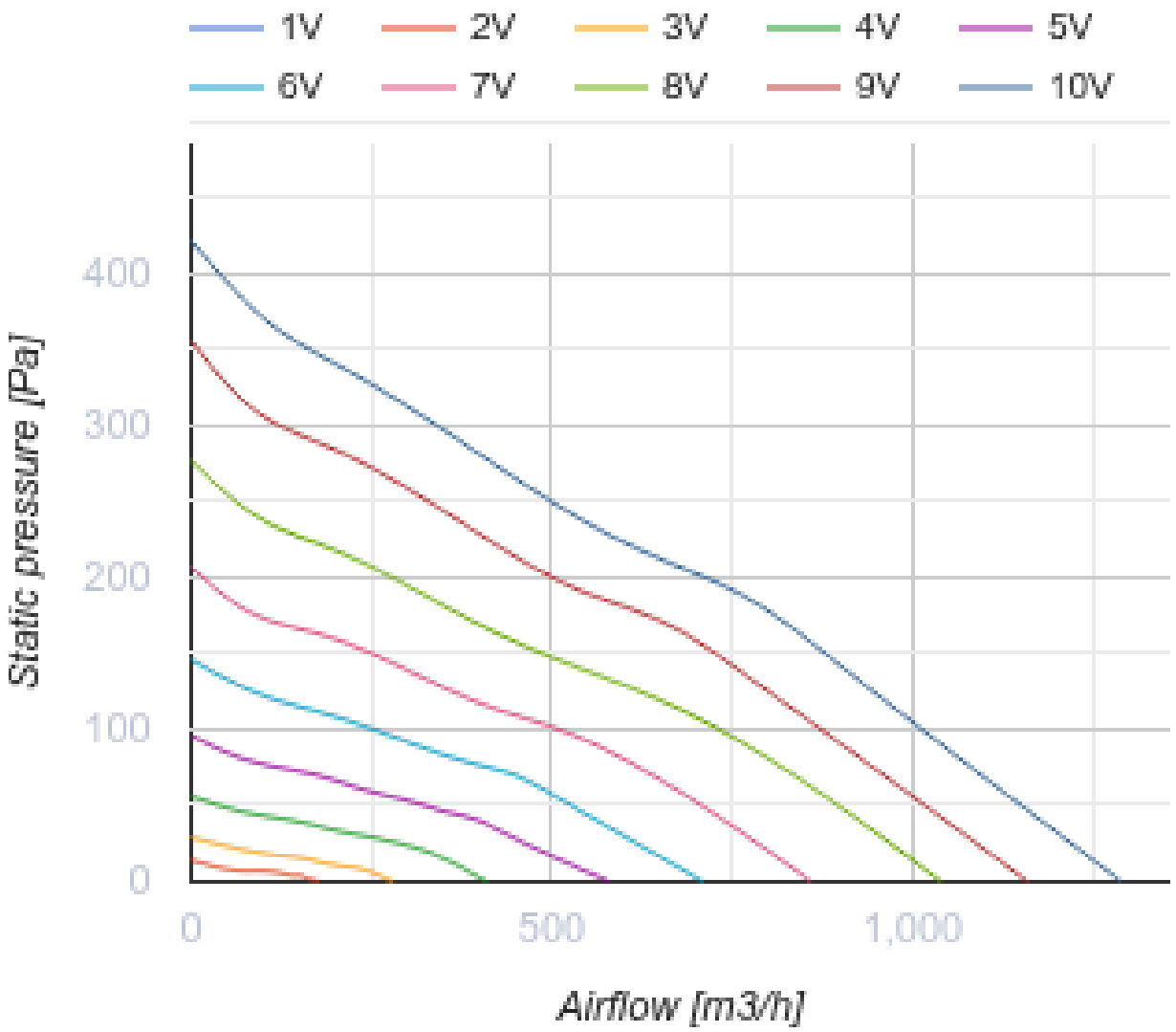
1V
2V
3V
4V
5V
6V
7V
8V
9V
10V
Static pressure [Pa]
400
300
200
100
0
0
500
1,000
Airflow [m3/h]

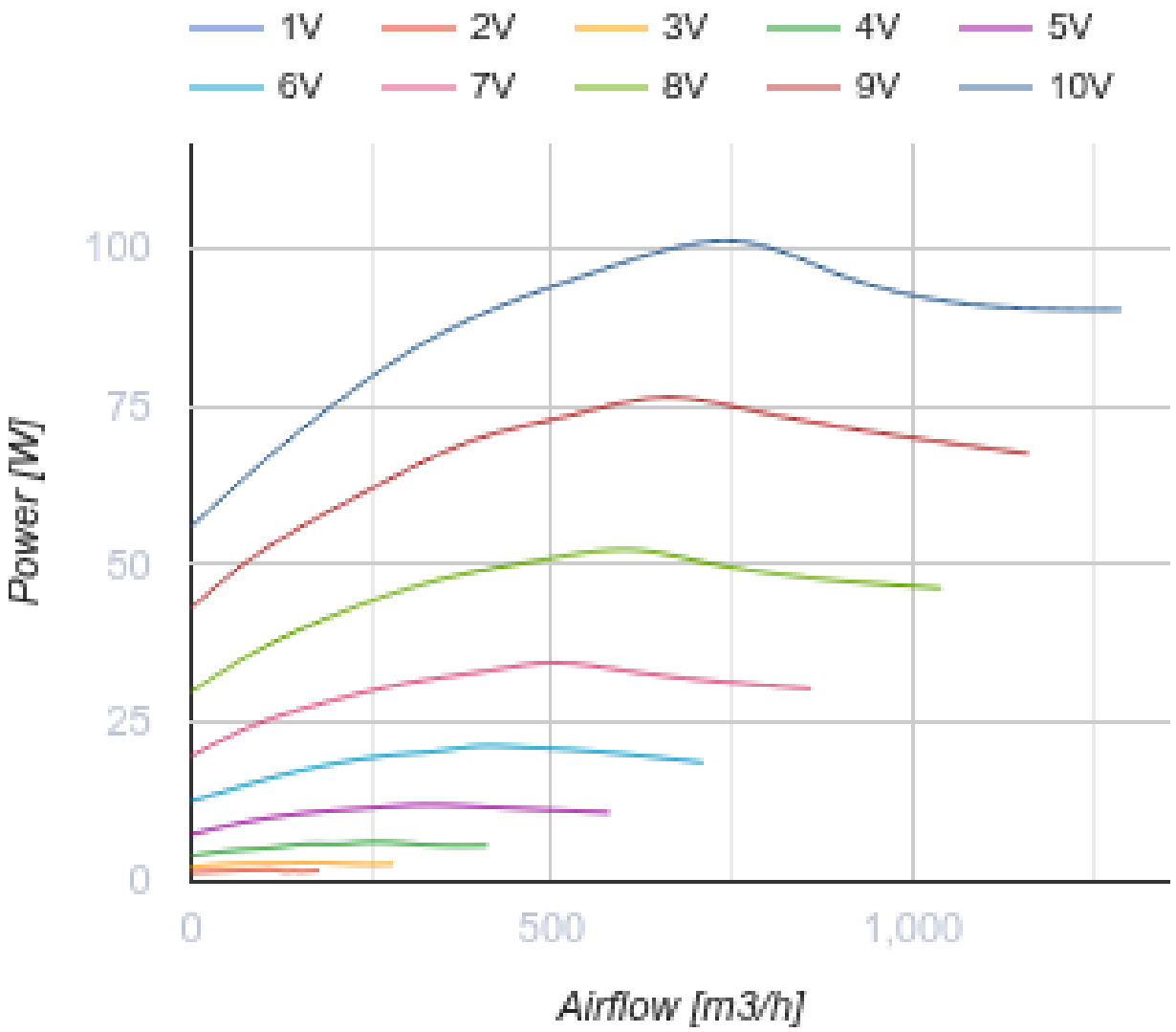

Dimensions

L	L1	H	L2
417	355	210	53

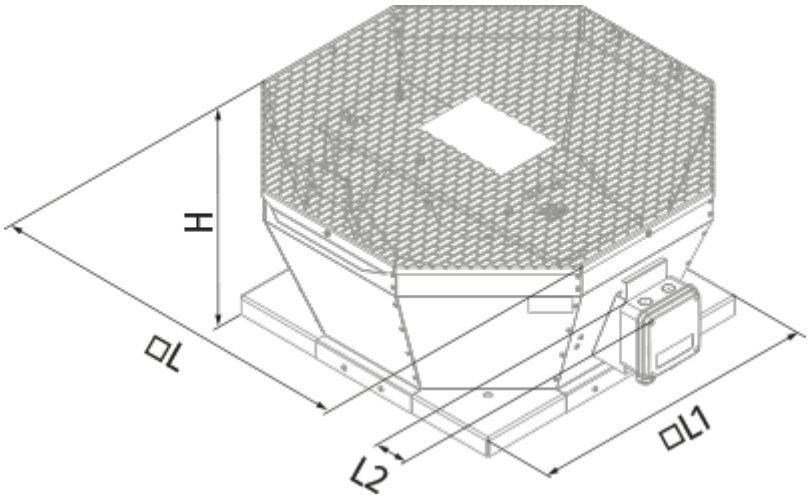
H
ØL
L2
ØL1

Ecodesign

Trademark	Blauberg
Model	Tower-V EC 225
Type of ventilation unit	Unidirectional
Type of drive installed	Integrated VSD
Type of heat recovery system	None
Nominal external pressure (Pa)	186
Maximum external leakage rates (%)	2.7
Static efficiency (%)	48.3
Declared typology	NRVU UVU
Effective electric power input (kW)	0.098
Sound power level (dB(A))	67

Accessories

EC motors regulators

Name	Photo	Description
CDT E/0-10		Speed control for EC motors