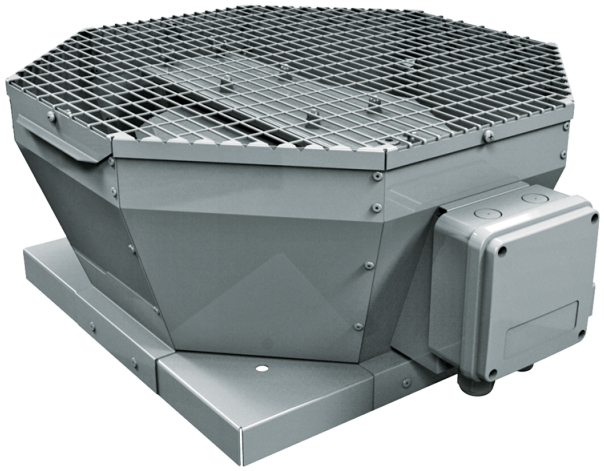

# Tower-V 560 6D

Roof centrifugal fans with vertical air discharge

• Impeller type: Centrifugal impeller with backward curved blades
• Casing material: Coated steel

| | Unit of measurement | Tower-V 560 6D |
|---|---|---|
| Phases | - | 3 |
| Maximum supply voltage | V | 400 |
| Minimum supply voltage | V | 400 |
| Power supply frequency | Hz | 50 |
| Maximum airflow | m³/h | 9630 |
| Weight | kg | 63 |
| Transported air temperature (max) | °C | 50 |
| Transported air temperature (min) | °C | -25 |
| Ingress protection rating | - | IPX4 |
| Ingress protection rating of the drive | - | IP54 |
| Impeller material | - | Aluminium |
| Size | mm | 560 |

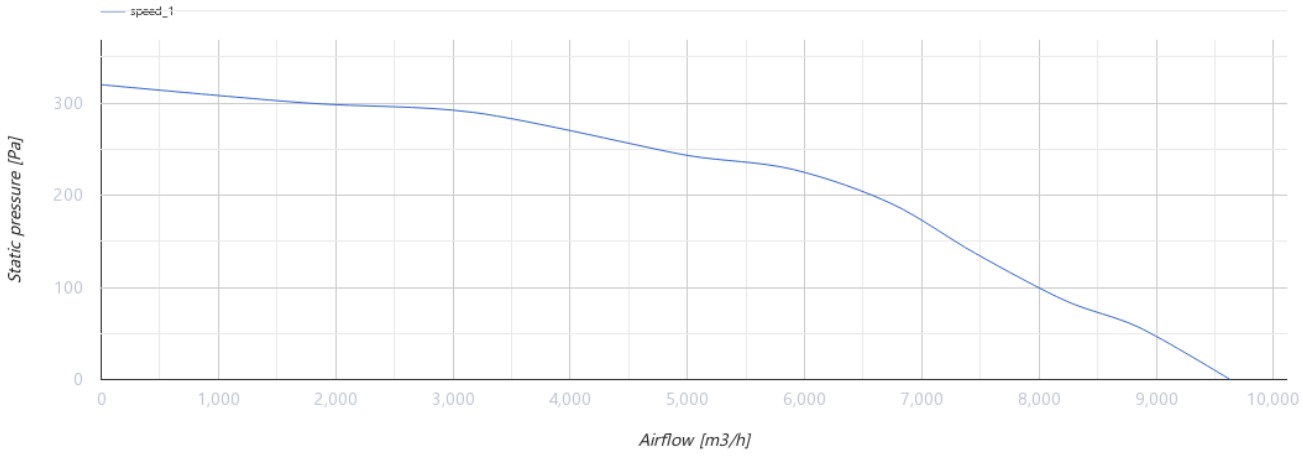


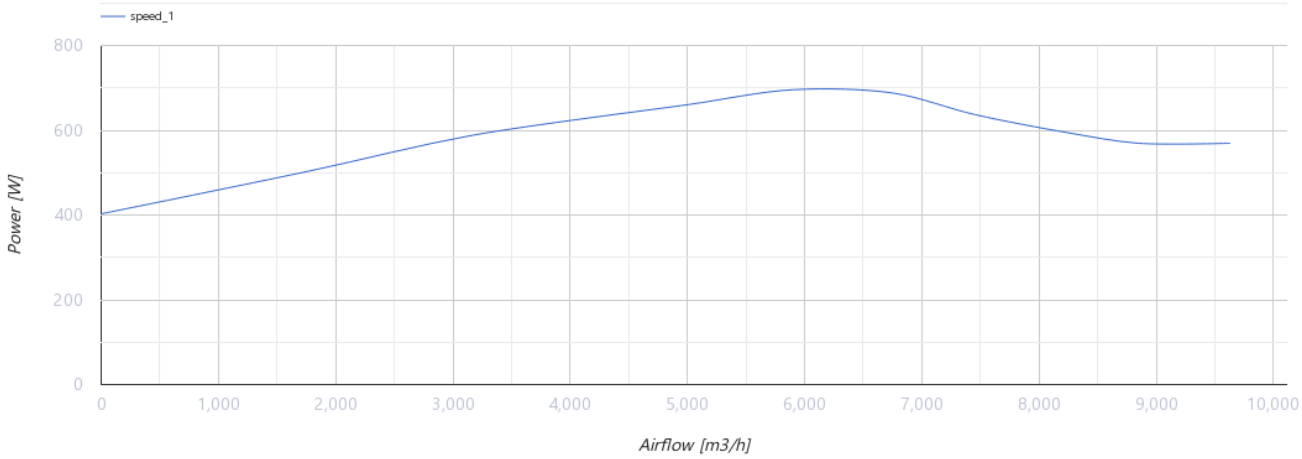


## Dimensions

| ØD | H | L | L1 |
|---|---|---|---|
| 605 | 485 | 859 | 833 |

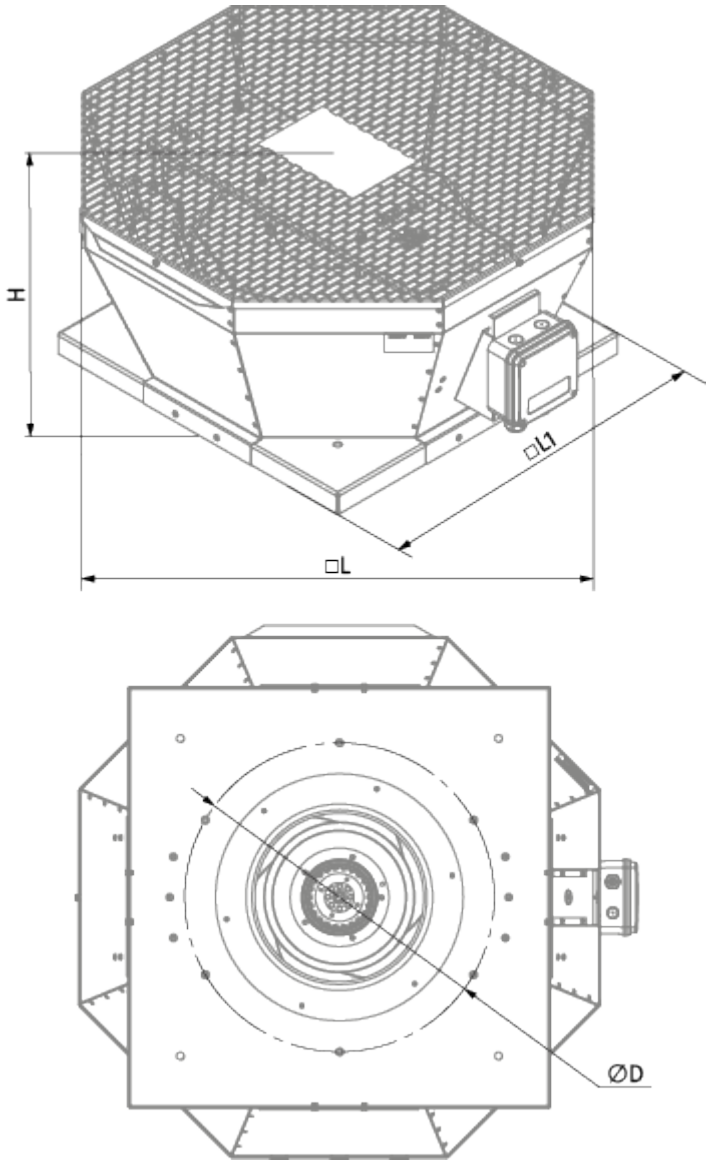


## Accessories

### Speed controllers

| Name | Photo | Description |
|---|---|---|
| CDT E1.8 |  | Thyristor speed controller |