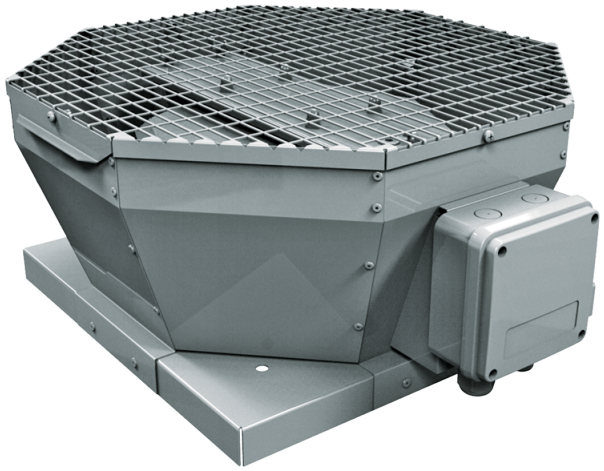

Tower-V 280 4E

Roof centrifugal fans with vertical air discharge

• Impeller type: Centrifugal impeller with backward curved blades
• Casing material: Coated steel

	Unit of measurement	Tower-V 280 4E
Phases	-	1
Minimum supply voltage	V	230
Maximum supply voltage	V	230
Power supply frequency	Hz	50/60
Maximum airflow	m^3/h	1490
Weight	kg	13
Transported air temperature (max)	°C	50
Transported air temperature (min)	°C	-25
Ingress protection rating	-	IPX4
Ingress protection rating of the drive	-	IP44
Impeller material	-	Galvanized steel
Size	mm	280

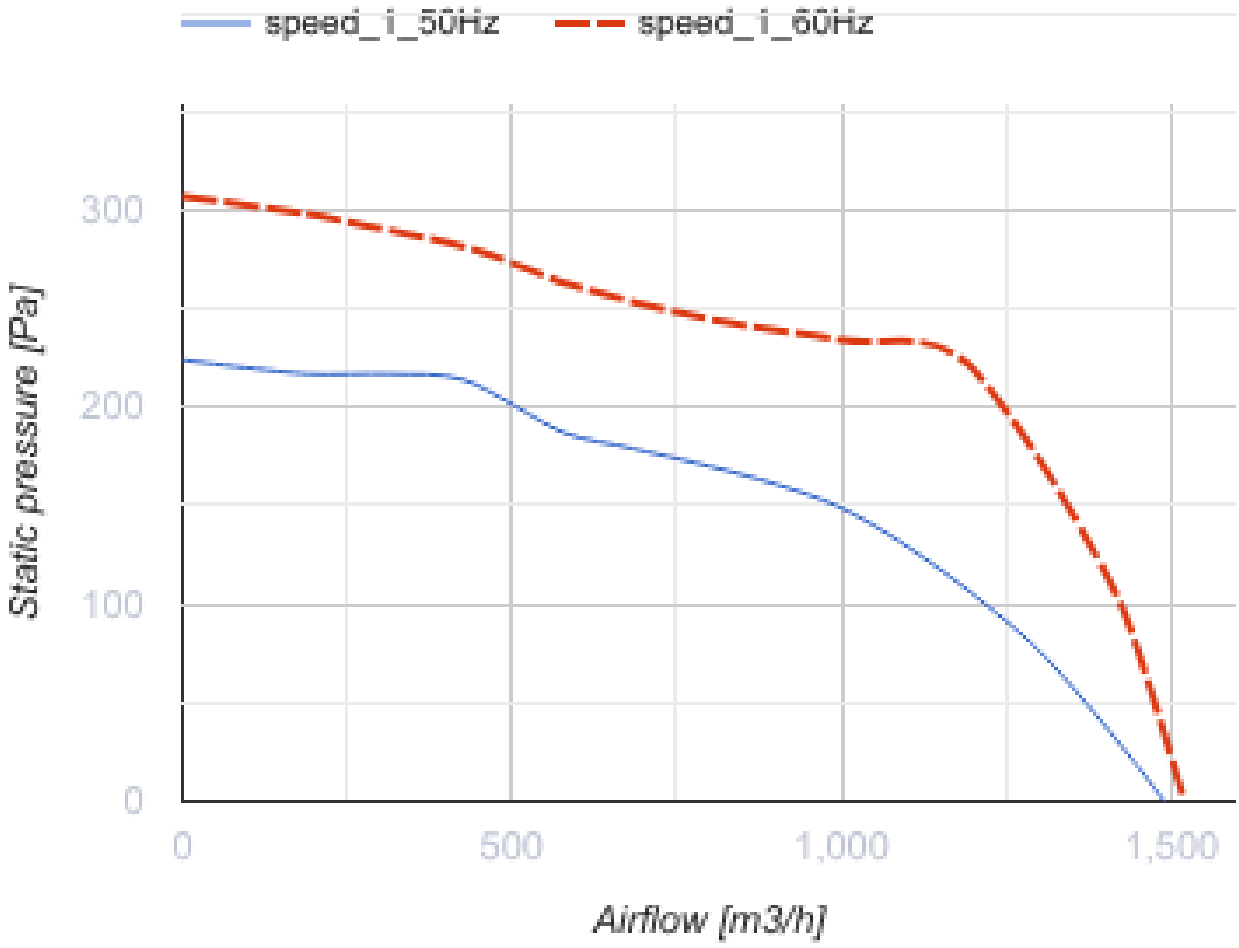
speed_i_50Hz
speed_i_60Hz
Static pressure [Pa]
300
200
100
0
0
500
1,000
1,500
Airflow [m3/h]

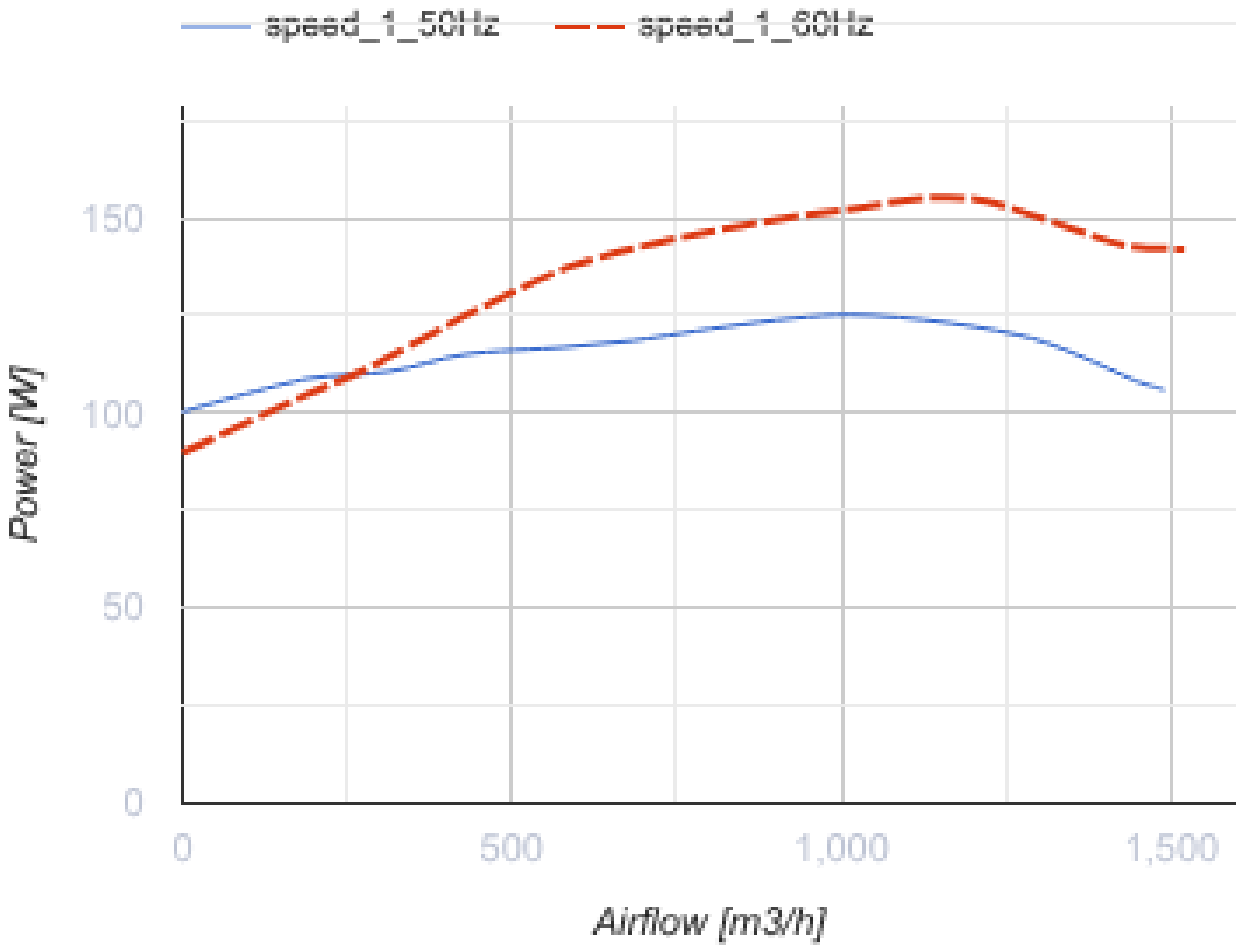

Dimensions

ØD	H	L	L1
291	276	547	425

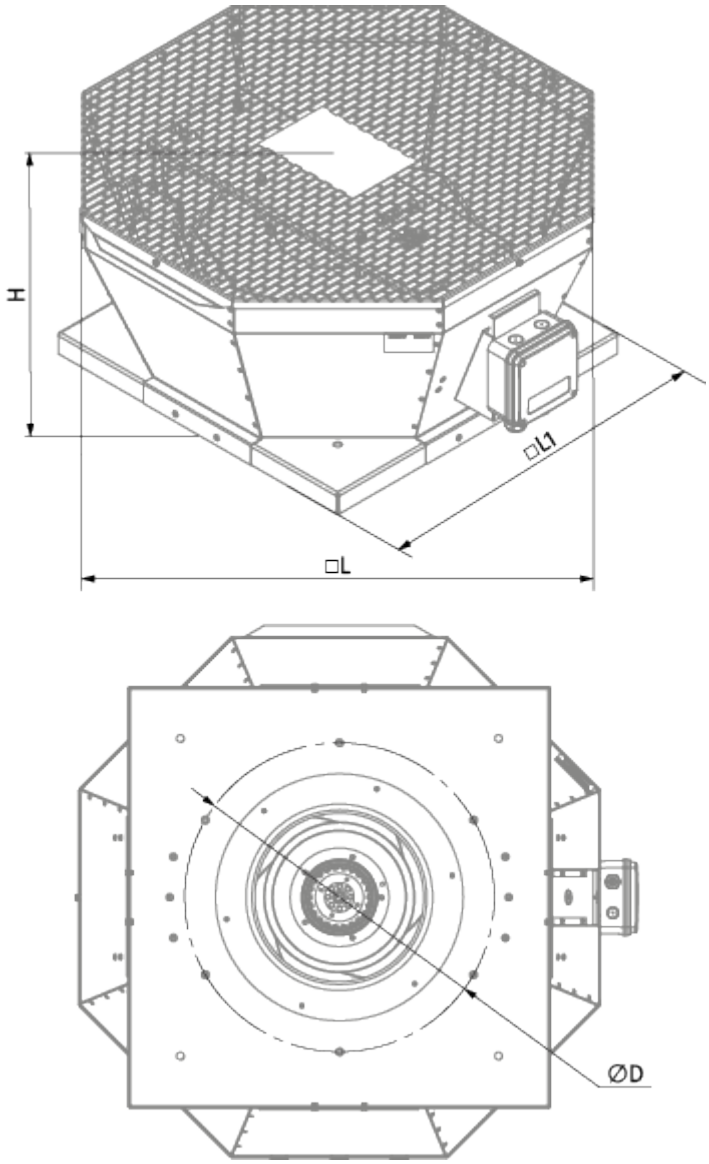

Accessories

Speed controllers

Name	Photo	Description
CDT E1.8		Thyristor speed controller