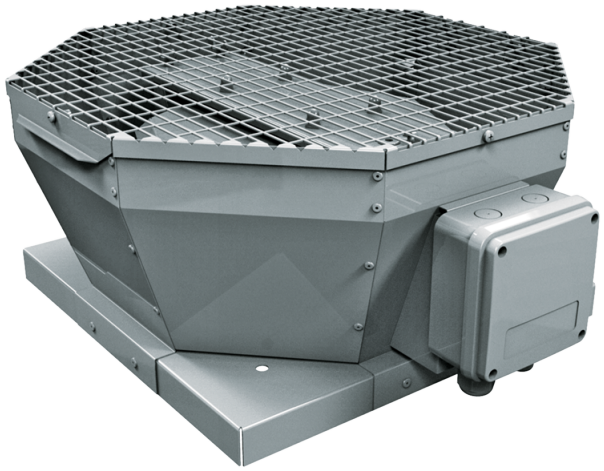

Tower-V 250 2E

Roof centrifugal fans with vertical air discharge

• Impeller type: Centrifugal impeller with backward curved blades
• Casing material: Coated steel

	Unit of measurement	Tower-V 250 2E
Phases	-	1
Minimum supply voltage	V	230
Maximum supply voltage	V	230
Power supply frequency	Hz	50/60
Maximum airflow	m^3/h	1450
Weight	kg	9
Transported air temperature (max)	°C	50
Transported air temperature (min)	°C	-25
Ingress protection rating	-	IPX4
Ingress protection rating of the drive	-	IP44
Impeller material	-	Plastic
Size	mm	250

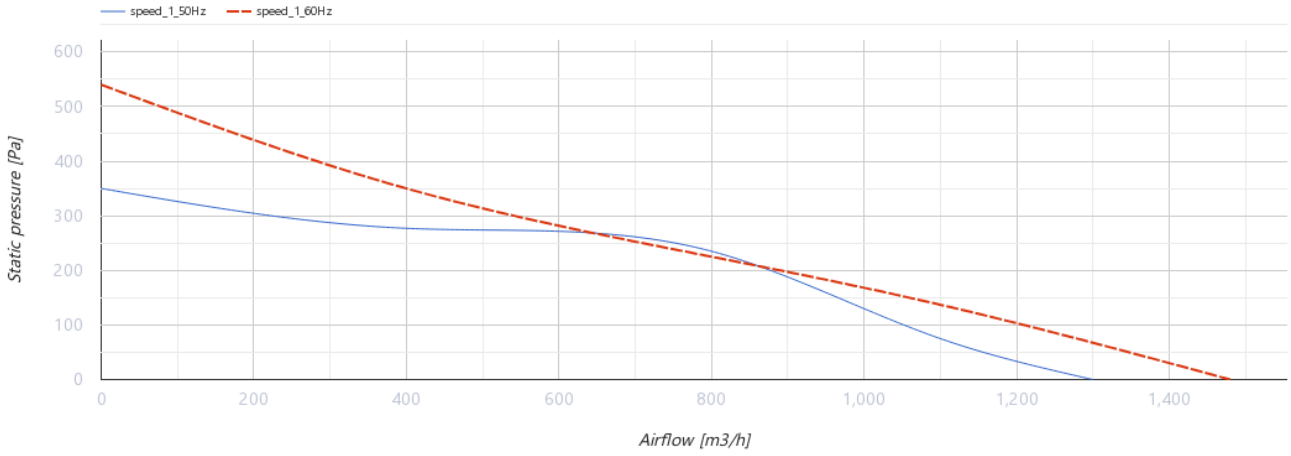

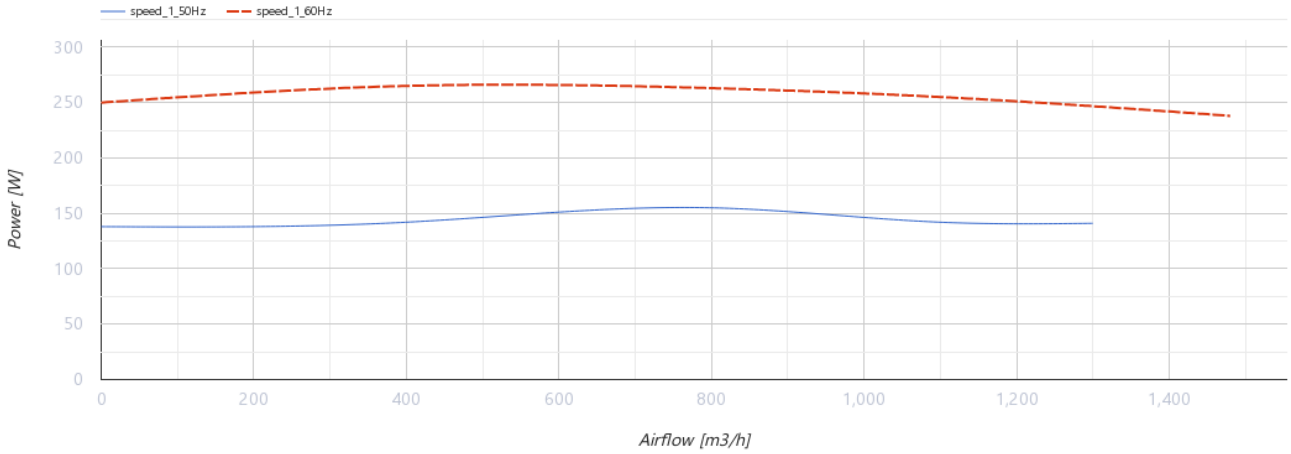

Dimensions

ØD	H	L	L1
285	240	481	425

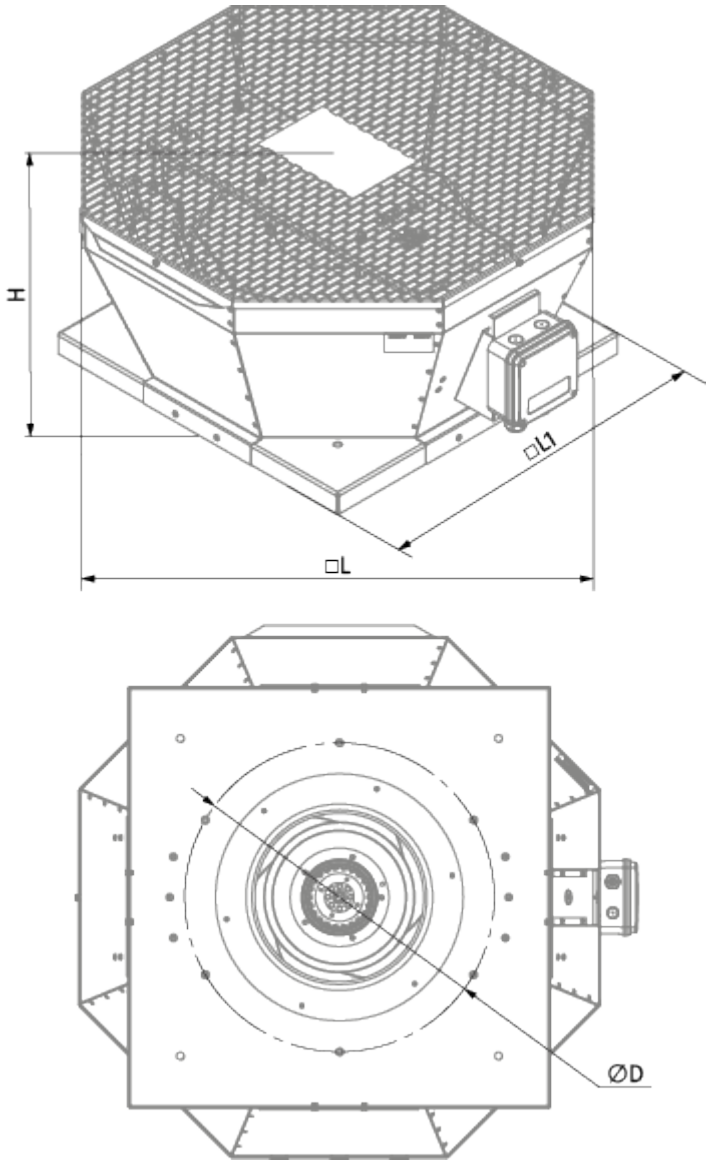
H
□L1
□L
ØD

Ecodesign

Trademark	Blauberg
Model	Tower-V 250 2E
Type of ventilation unit	Unidirectional
Type of drive installed	External MSD or VSD
Type of heat recovery system	None
Nominal external pressure (Pa)	211
Maximum external leakage rates (%)	2.7
Static efficiency (%)	20.1
Declared typology	NRVU UVU
Effective electric power input (kW)	0.208
Sound power level (dB(A))	85

Accessories

Speed controllers

Name	Photo	Description
CDT E1.8		Thyristor speed controller