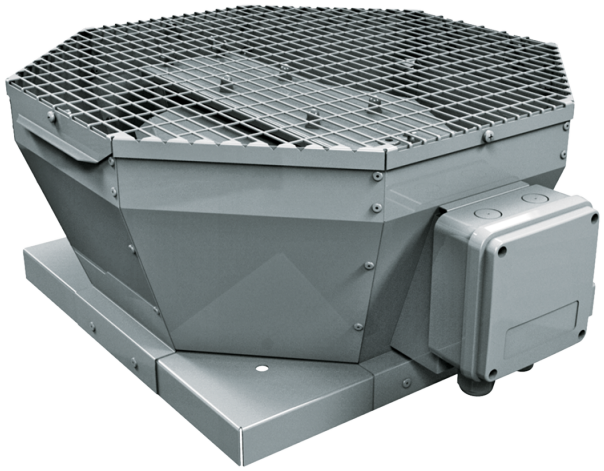

Tower-V 190 2E

Roof centrifugal fans with vertical air discharge

• Impeller type: Centrifugal impeller with backward curved blades
• Casing material: Coated steel

	Unit of measurement	Tower-V 190 2E
Phases	-	1
Minimum supply voltage	V	230
Maximum supply voltage	V	230
Power supply frequency	Hz	50/60
Maximum airflow	m^3/h	610
Weight	kg	7
Transported air temperature (max)	°C	50
Transported air temperature (min)	°C	-25
Ingress protection rating	-	IPX4
Ingress protection rating of the drive	-	IP44
Impeller material	-	Plastic
Size	mm	190

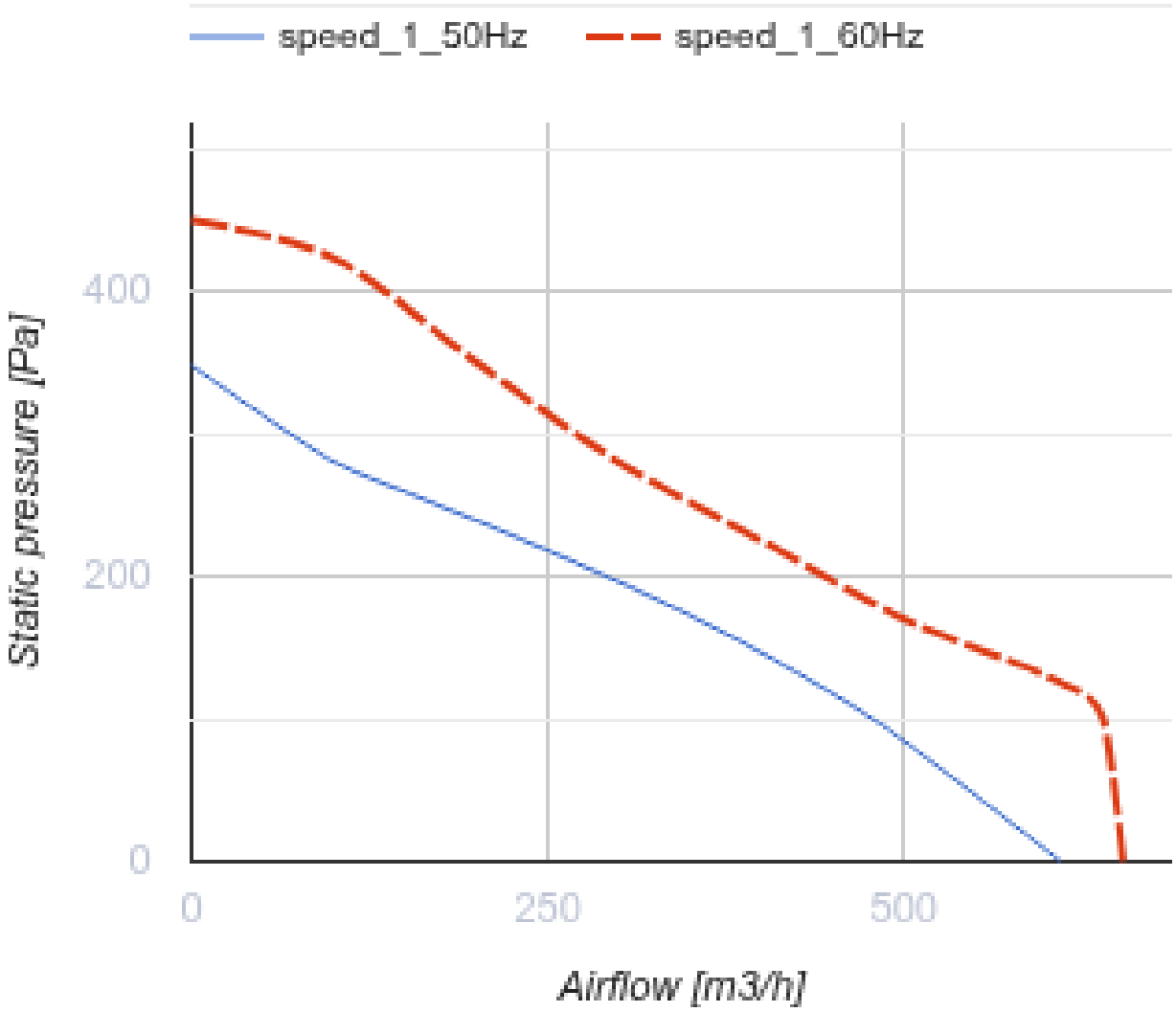
speed_1_50Hz
speed_1_60Hz
400
200
0
Static pressure [Pa]
0
250
500
Airflow [m3/h]

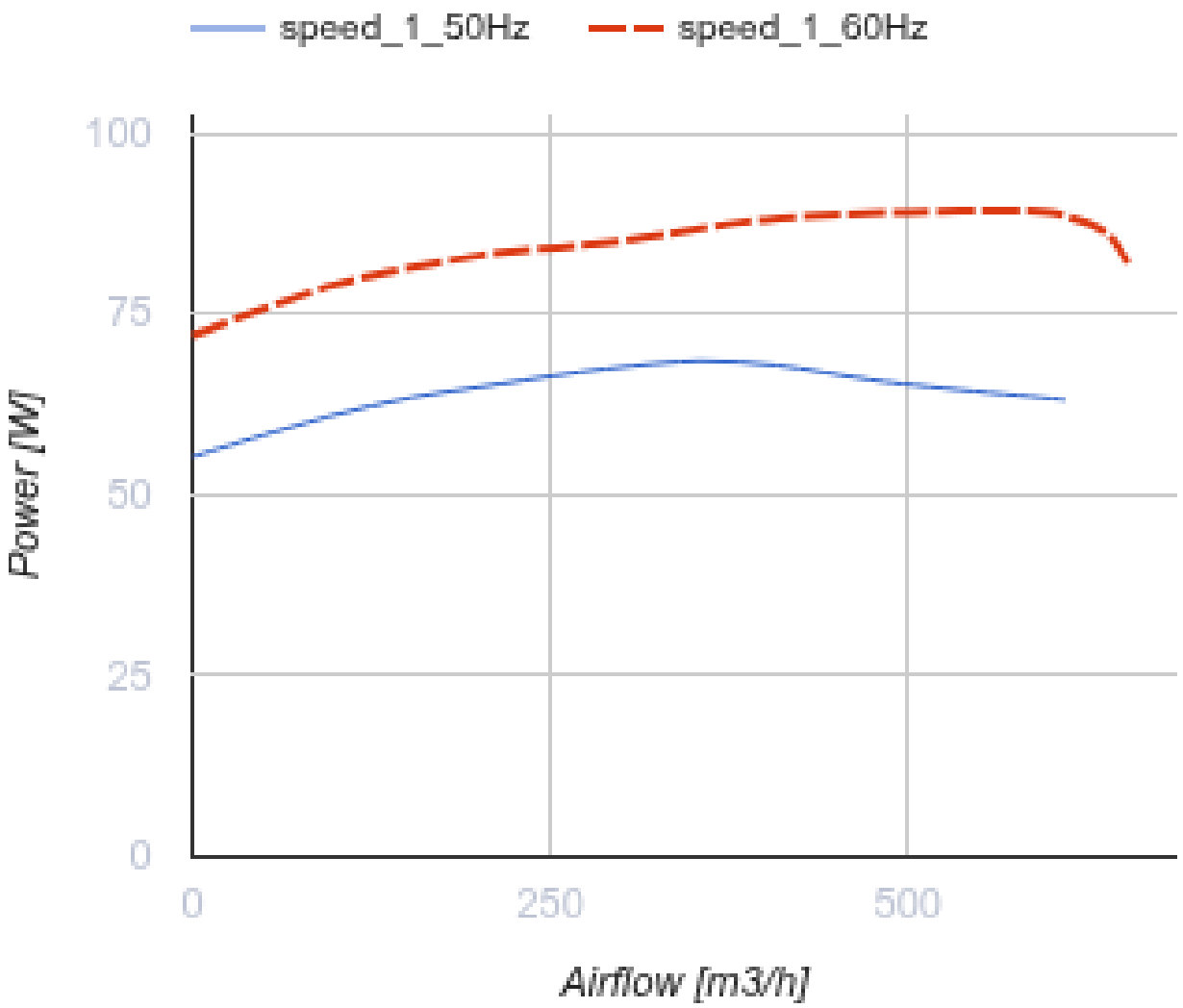

Dimensions

ØD	H	L	L1
213	170	417	355

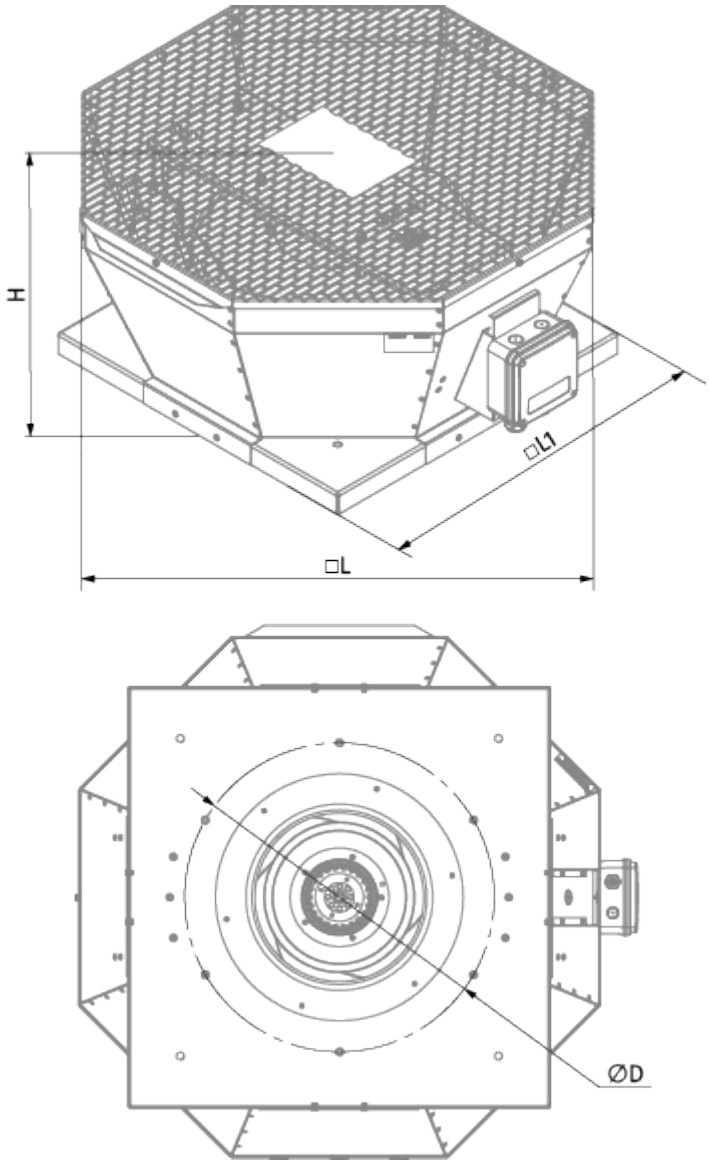
H
□L1
□L
ØD

Ecodesign

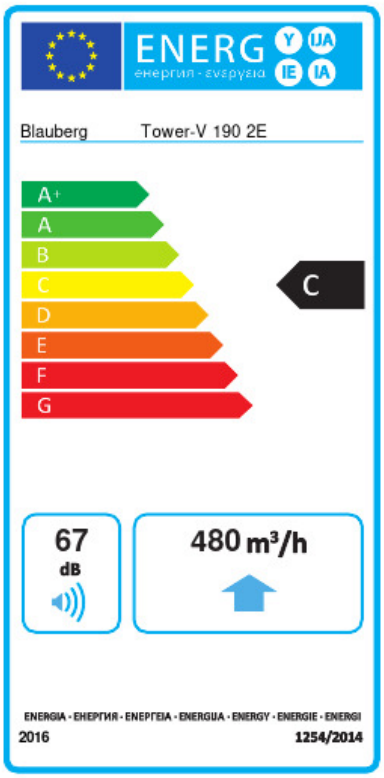

Trademark	Blauberg					
Model	Tower-V 190 2E					
Specific energy consumption (SEC) (kWh/(m²/a))	Cold		Average		Warm	
	-52.7	A+	-25.7	C	-10.2	E
Type of ventilation unit	Unidirectional					
Type of drive installed	Variable speed					
Type of heat recovery system	None					
Maximum flow rate (m³/h)	480					
Electric power input (W)	65					
Reference flow rate (m³/s)	0.093					
Reference pressure difference (Pa)	50					
Specific power input (SPI) (W/(m³/h))	0.199					
Control typology	Local demand control					
Maximum external leakage rates (%)	2.7					
Declared typology	RVU UVU					
Sound power level (dB(A))	67					
The annual electricity consumption (AEC) (kWh/a)	Cold		Average		Warm	
	106		106		106	
The annual heating saved (AHS) (kWh/a)	Cold		Average		Warm	
	5536		2830		1280	

Accessories

Speed controllers

Name	Photo	Description
CDT E1.8		Thyristor speed controller