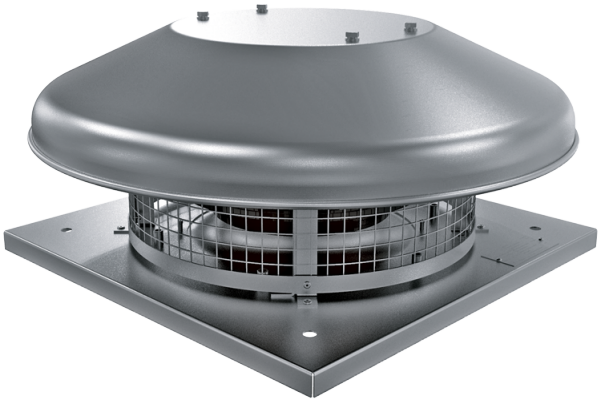

Tower-HC 250 4E

Roof centrifugal fans

• Impeller type: Centrifugal impeller with backward curved blades
• Casing material: Coated steel

	Unit of measurement	Tower-HC 250 4E
Phases	-	1
Minimum supply voltage	V	230
Maximum supply voltage	V	230
Power supply frequency	Hz	50
Maximum airflow	m³/h	830
Weight	kg	8
Transported air temperature (max)	°C	50
Transported air temperature (min)	°C	-25
Ingress protection rating	-	IPX4
Ingress protection rating of the drive	-	IP44
Size	mm	250

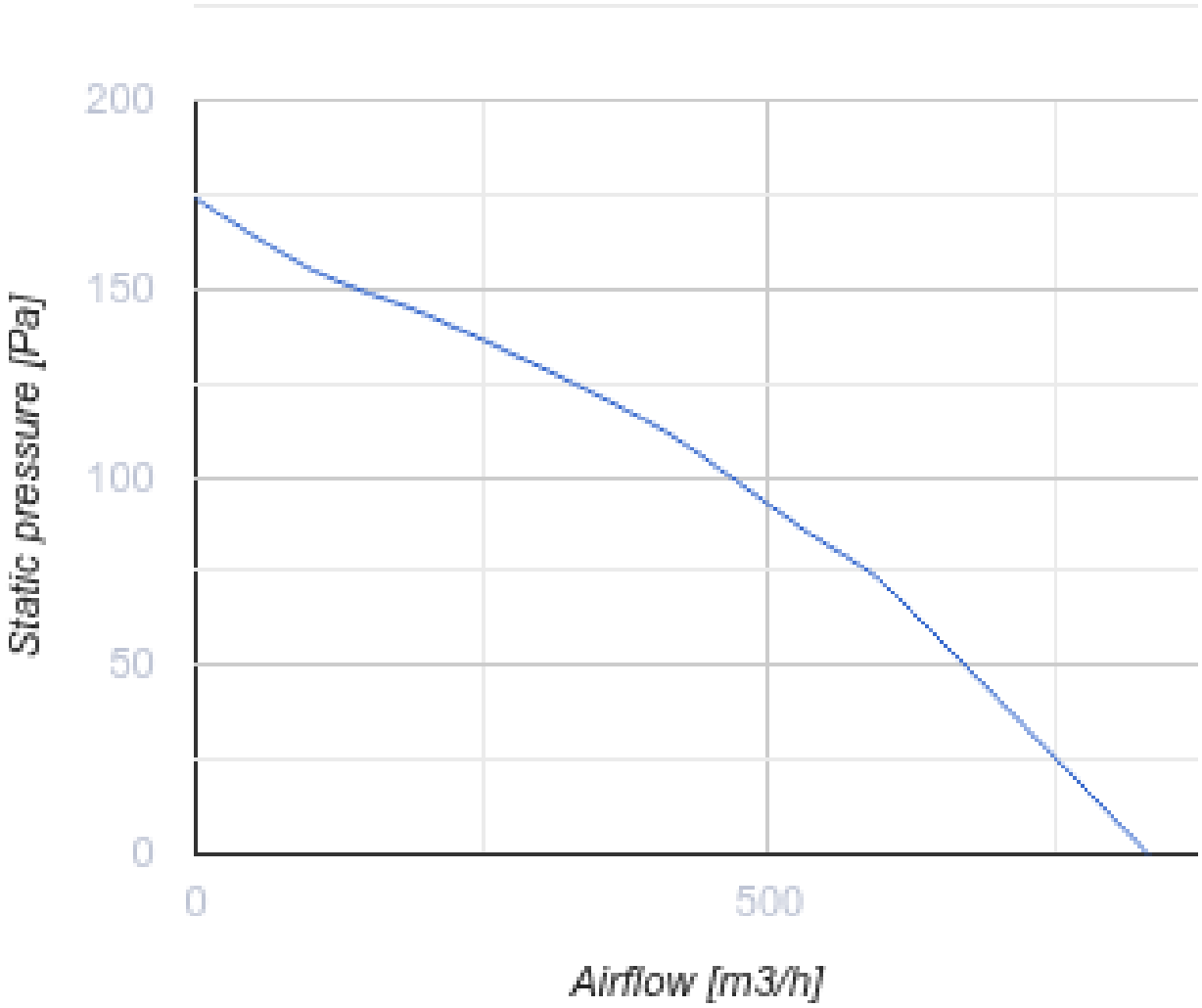
200
150
100
50
0
Static pressure [Pa]
0
500
Airflow [m3/h]

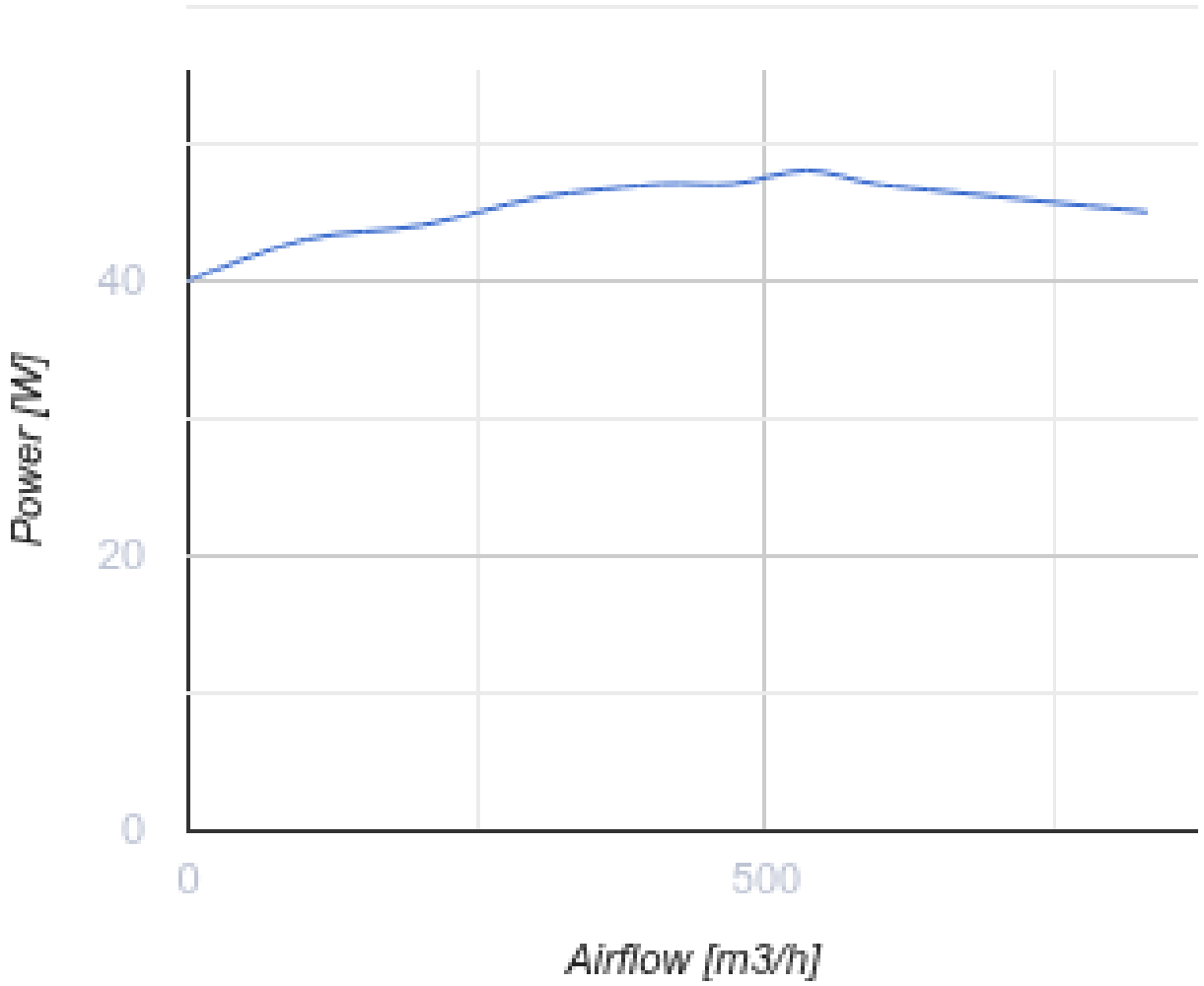

Dimensions

H	ØD	ØD1	L	L1
224	503	285	420	330

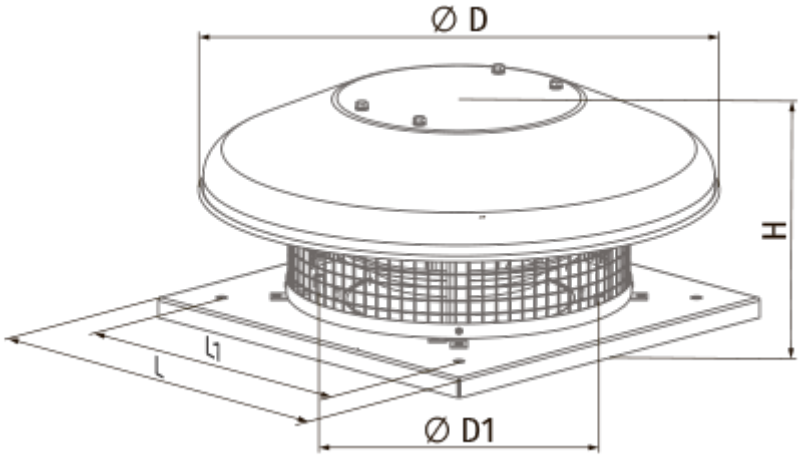
Ø D
H
L1
L
Ø D1

Ecodesign

Trademark	Blauberg
Model	Tower-HC 250 4E
Type of drive installed	Integrated VSD
Type of heat recovery system	None
Nominal external pressure (Pa)	99
Maximum external leakage rates (%)	2.7
Static efficiency (%)	33.2
Declared typology	NRVU UVU
Effective electric power input (kW)	0.047
Sound power level (dB(A))	58