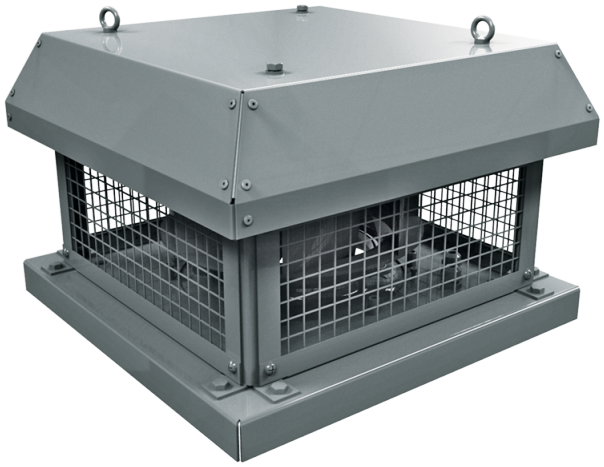

Tower-H EC 500

Roof centrifugal fans with horizontal air discharge with EC-motors

• Impeller type: Centrifugal impeller with backward curved blades
• Casing material: Coated steel

	Unit of measurement	Tower-H EC 500
Phases	-	3
Maximum supply voltage	V	400
Minimum supply voltage	V	400
Power supply frequency	Hz	50/60
Maximum airflow	m³/h	10900
Weight	kg	51
Transported air temperature (max)	°C	50
Transported air temperature (min)	°C	-25
Ingress protection rating	-	IPX4
Ingress protection rating of the drive	-	IP54
Impeller material	-	Plastic
Size	mm	500

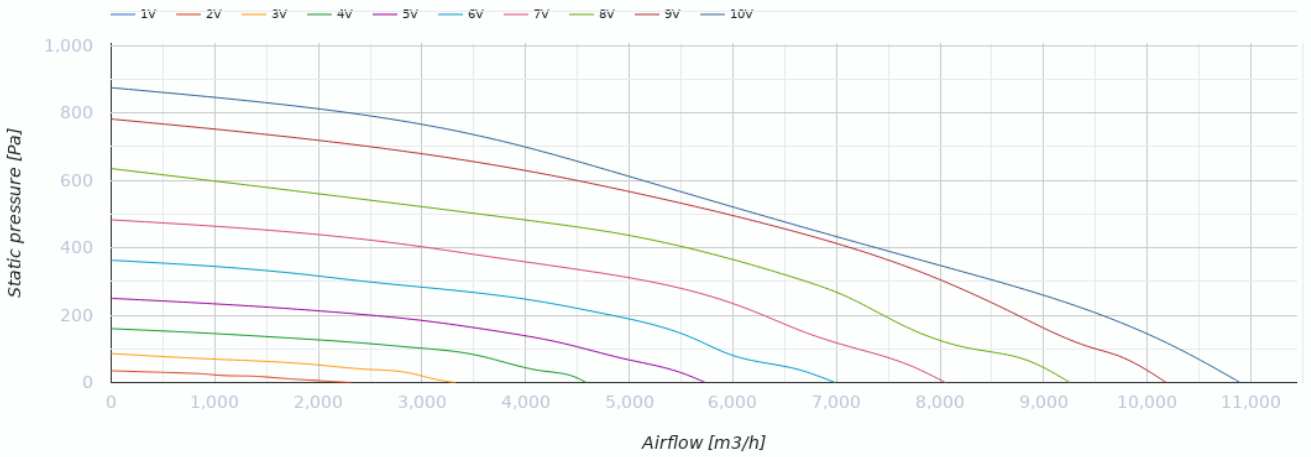

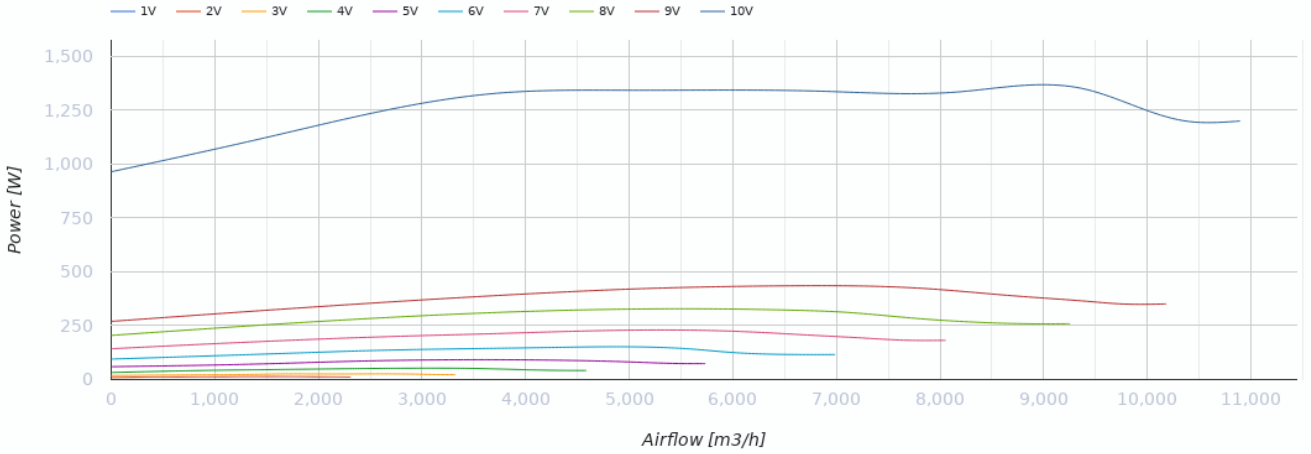

Dimensions

ØD	Ød	H	L	L1	L2
445	11	467	700	535	710

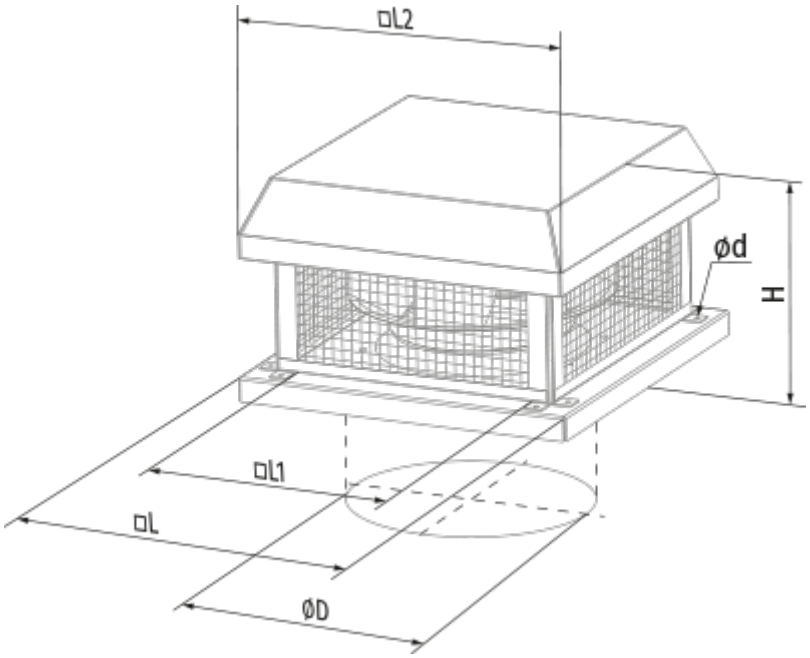
□L2
ød
H
□L1
□L
ØD

Ecodesign

Trademark	Blauberg
Model	Tower-H EC 500
Type of ventilation unit	Unidirectional
Type of drive installed	Integrated VSD
Type of heat recovery system	None
Nominal external pressure (Pa)	720
Maximum external leakage rates (%)	2.7
Static efficiency (%)	59.8
Declared typology	NRVU UVU
Sound power level (dB(A))	83
Effective electric power input (kW)	2.65

Accessories

EC motors regulators

Name	Photo	Description
CDT E/0-10		Speed control for EC motors