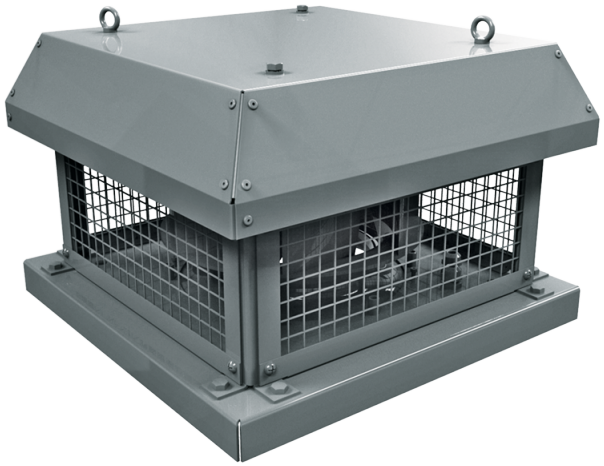

Tower-H EC 450

Roof centrifugal fans with horizontal air discharge with EC-motors

• Impeller type: Centrifugal impeller with backward curved blades
• Casing material: Coated steel

	Unit of measurement	Tower-H EC 450
Phases	-	3
Maximum supply voltage	V	400
Minimum supply voltage	V	400
Power supply frequency	Hz	50/60
Maximum airflow	m³/h	8110
Weight	kg	46
Transported air temperature (max)	°C	60
Transported air temperature (min)	°C	-20
Ingress protection rating	-	IPX4
Ingress protection rating of the drive	-	IP54
Impeller material	-	Aluminium
Size	mm	450

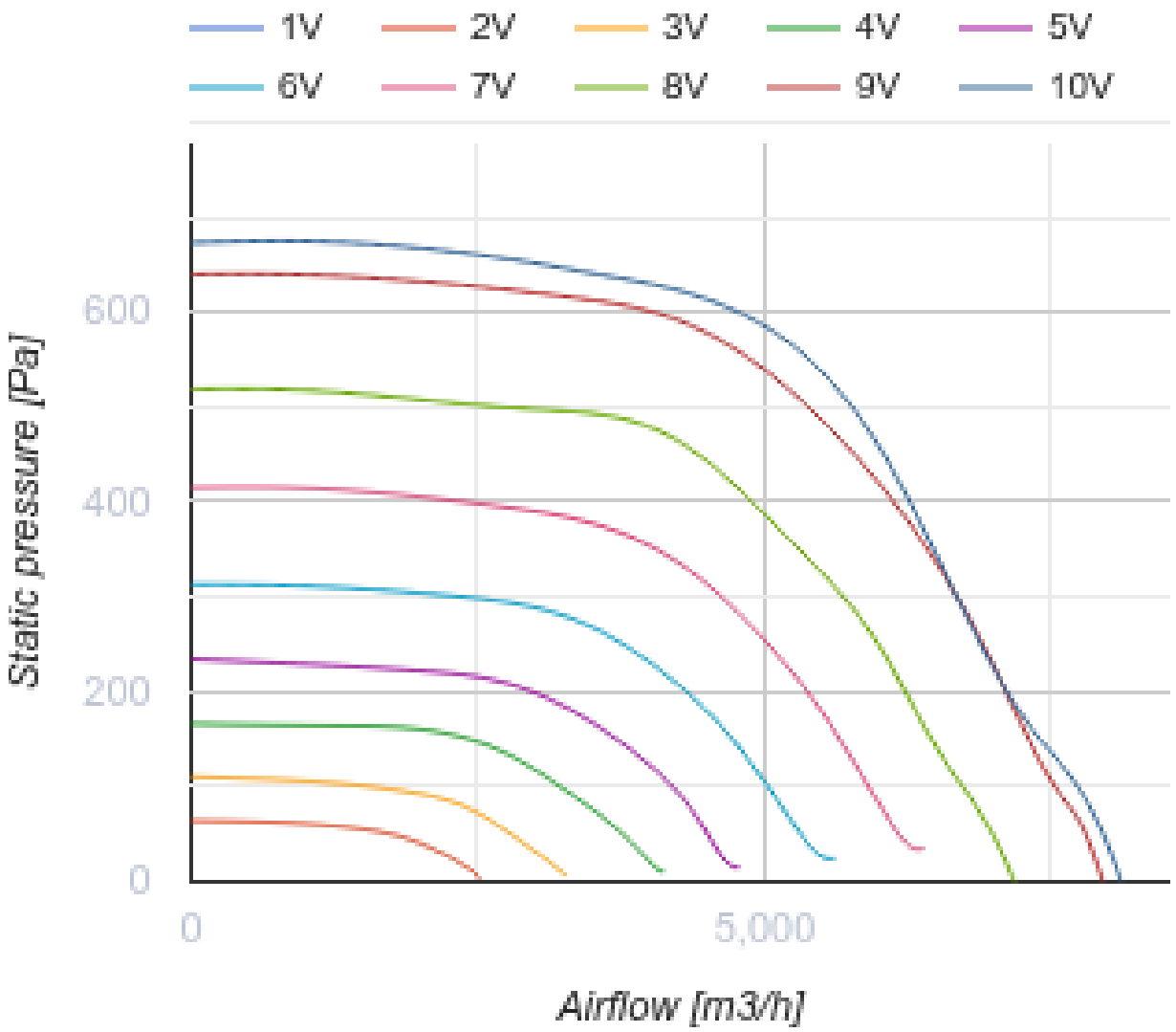
1V
2V
3V
4V
5V
6V
7V
8V
9V
10V
600
400
200
0
Static pressure [Pa]
0
5,000
Airflow [m3/h]

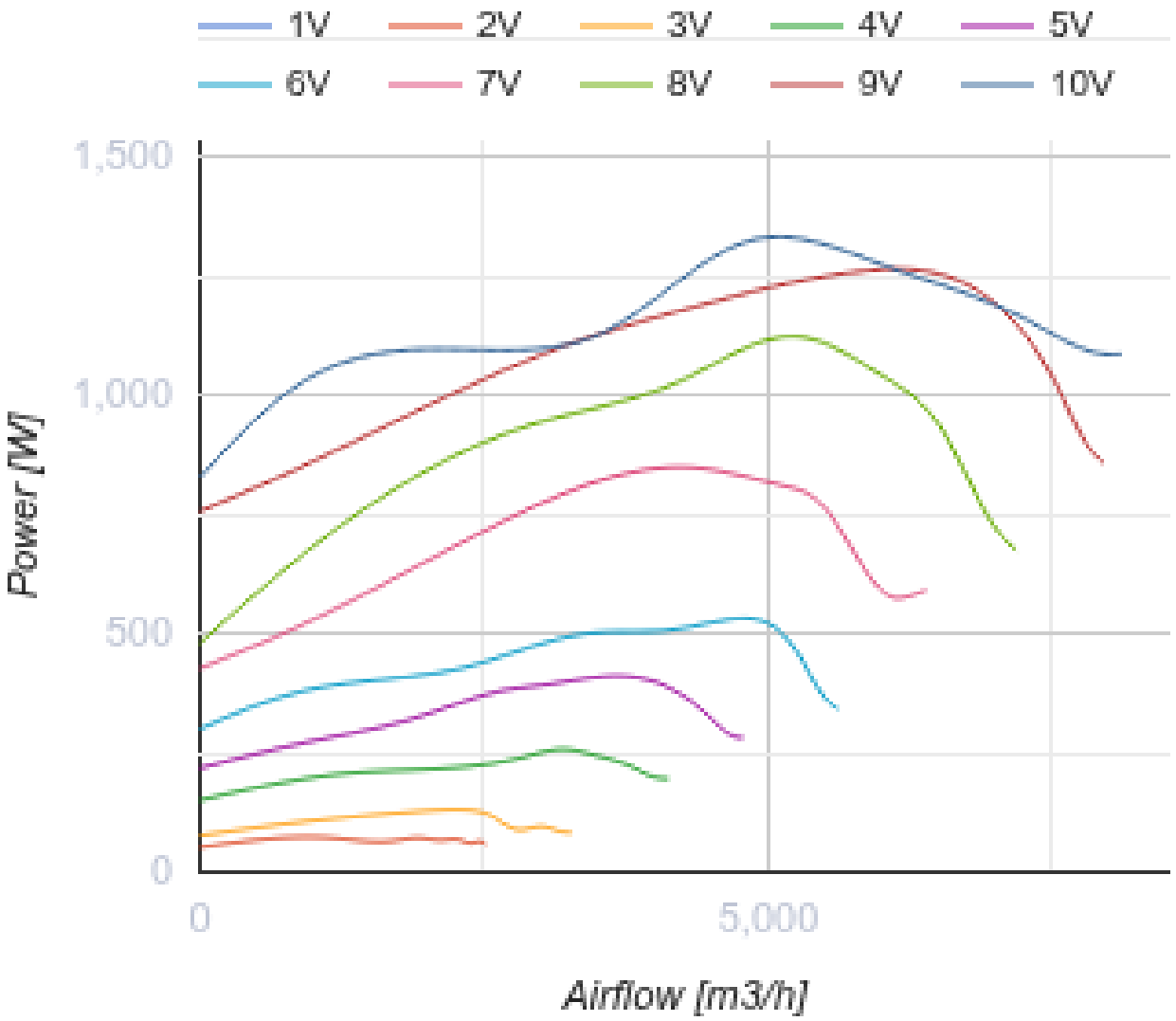

Dimensions

ØD	Ød	H	L	L1	L2
438	11	420	700	535	710

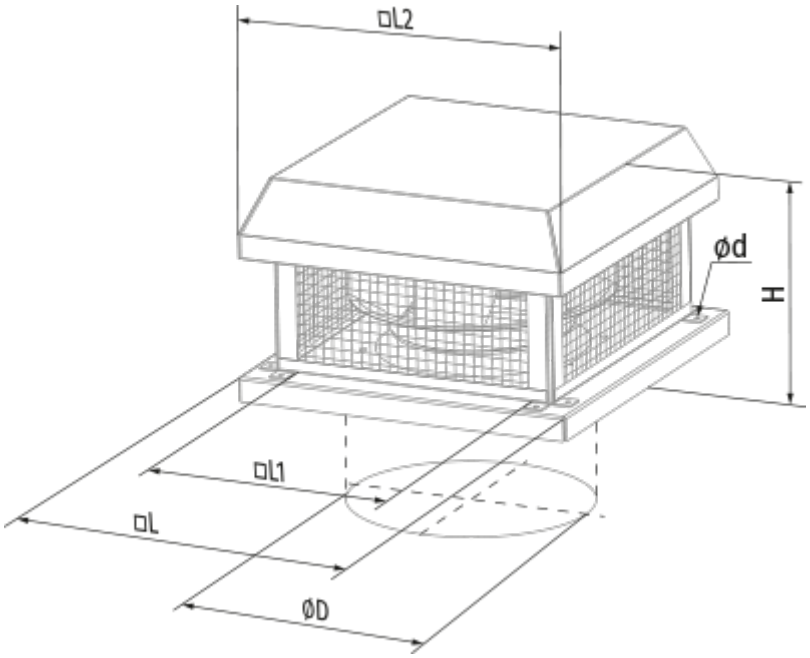
□L2
ød
H
□L1
□L
ØD

Ecodesign

Trademark	Blauberg
Model	Tower-H EC 450
Type of ventilation unit	Unidirectional
Type of drive installed	Integrated VSD
Type of heat recovery system	None
Nominal external pressure (Pa)	483
Maximum external leakage rates (%)	2.7
Static efficiency (%)	65.8
Sound power level (dB(A))	75
Effective electric power input (kW)	1.01
Declared typology	NRVU UVU

Accessories

EC motors regulators

Name	Photo	Description
CDT E/0-10		Speed control for EC motors