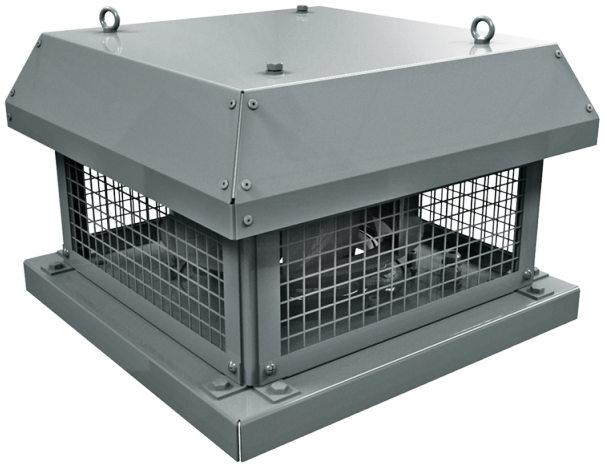

Tower-H EC 280

Roof centrifugal fans with horizontal air discharge with EC-motors

• Impeller type: Centrifugal impeller with backward curved blades
• Casing material: Coated steel

	Unit of measurement	Tower-H EC 280
Phases	-	1
Minimum supply voltage	V	230
Maximum supply voltage	V	230
Power supply frequency	Hz	50/60
Maximum airflow	m³/h	2330
Weight	kg	13
Transported air temperature (max)	°C	60
Transported air temperature (min)	°C	-20
Ingress protection rating	-	IPX4
Ingress protection rating of the drive	-	IP44
Impeller material	-	Galvanized steel
Size	mm	280

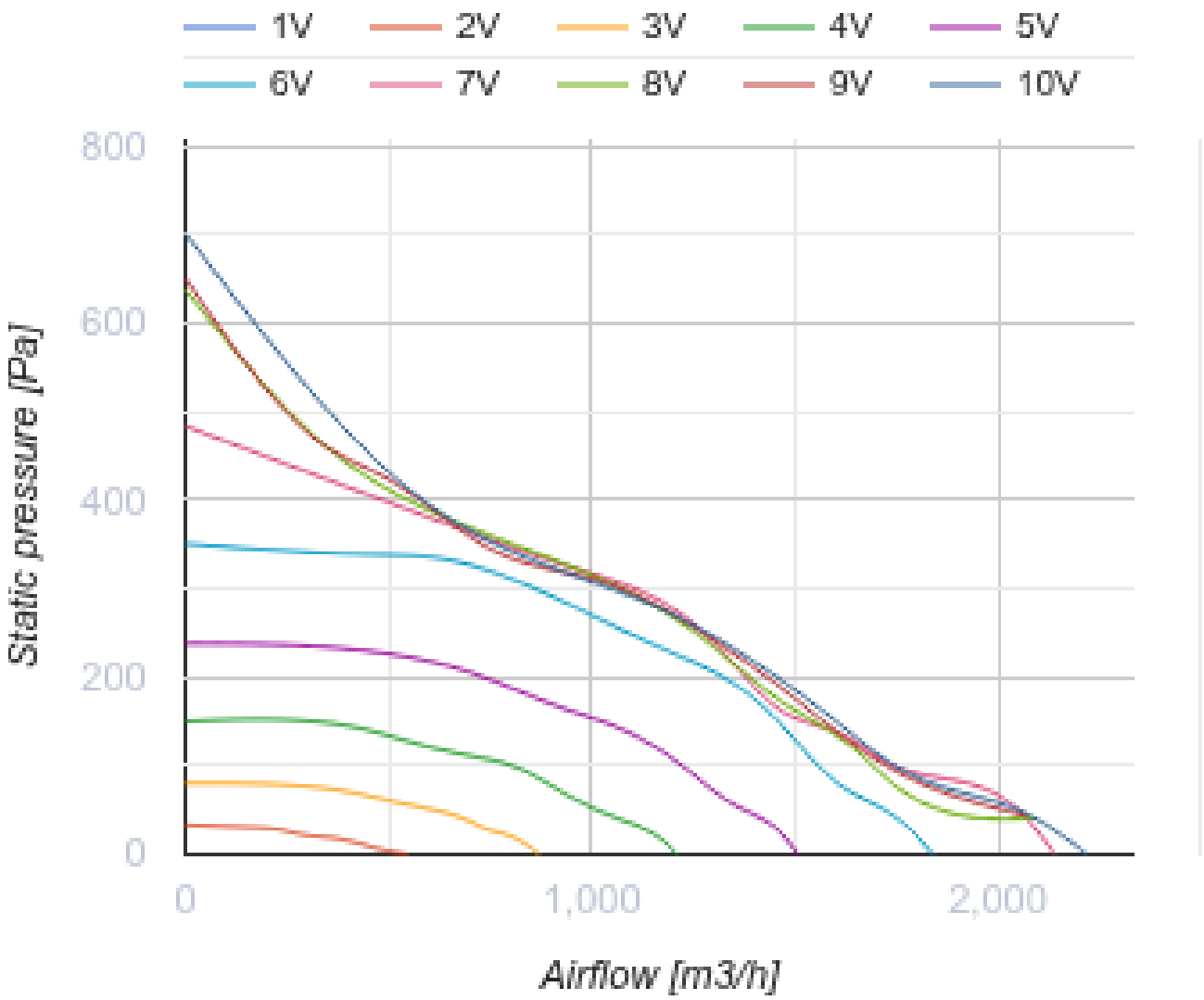
1V
2V
3V
4V
5V
6V
7V
8V
9V
10V
800
600
400
200
0
Static pressure [Pa]
0
1,000
2,000
Airflow [m3/h]

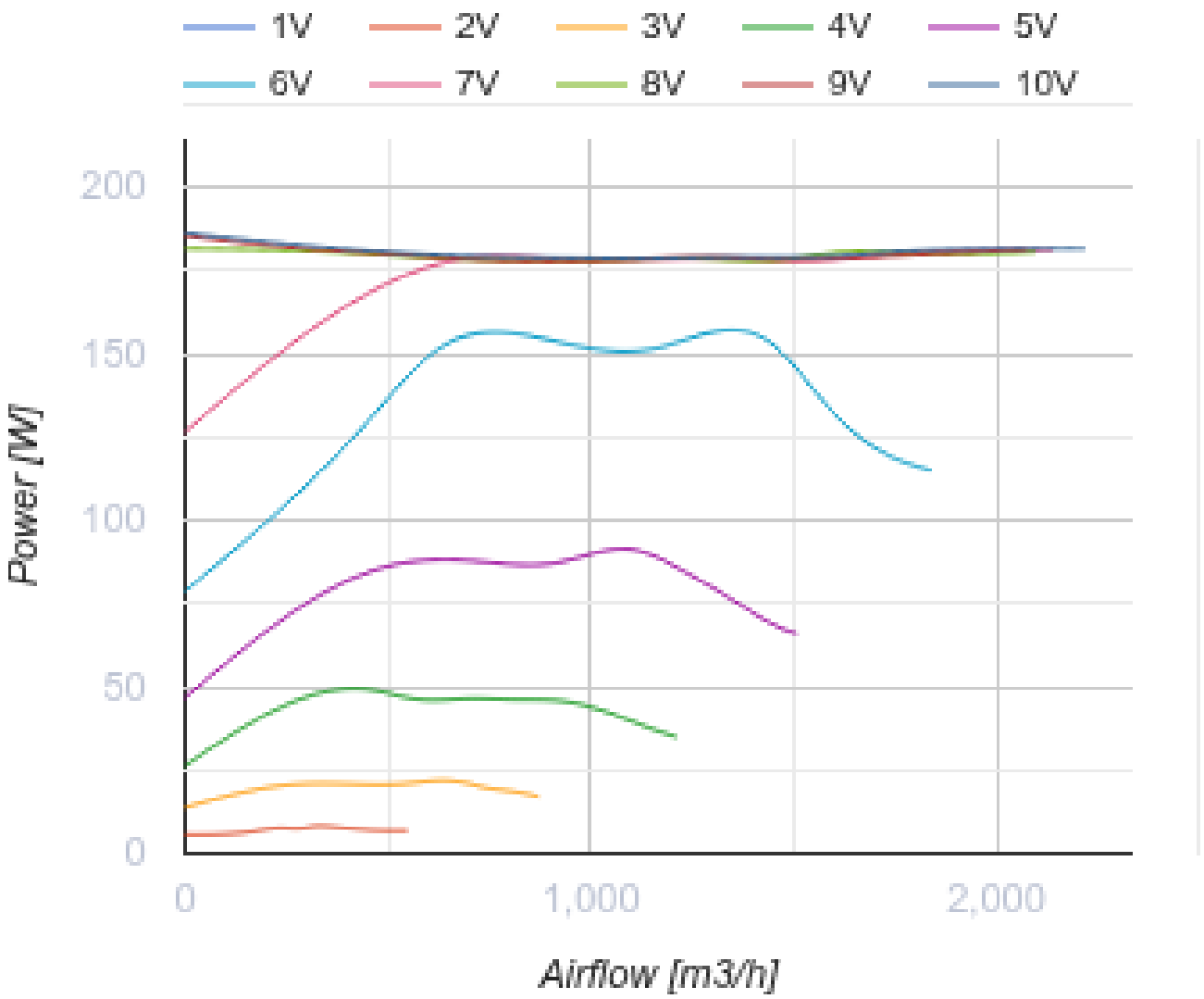

Dimensions

ØD	Ød	H	L	L1	L2
285	11	263	450	330	451

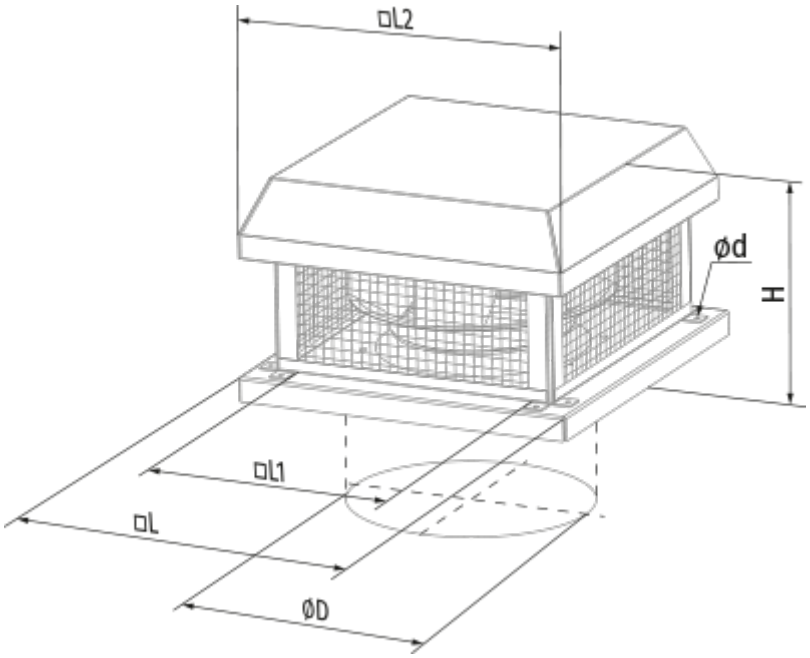
□L2
ød
H
□L1
□L
ØD

Ecodesign

Trademark	Blauberg
Model	Tower-H EC 280
Type of ventilation unit	Unidirectional
Type of drive installed	Integrated VSD
Type of heat recovery system	None
Nominal external pressure (Pa)	423
Maximum external leakage rates (%)	2.7
Static efficiency (%)	52.2
Declared typology	NRVU UVU
Sound power level (dB(A))	67
Effective electric power input (kW)	0.425

Accessories

EC motors regulators

Name	Photo	Description
CDT E/0-10		Speed control for EC motors