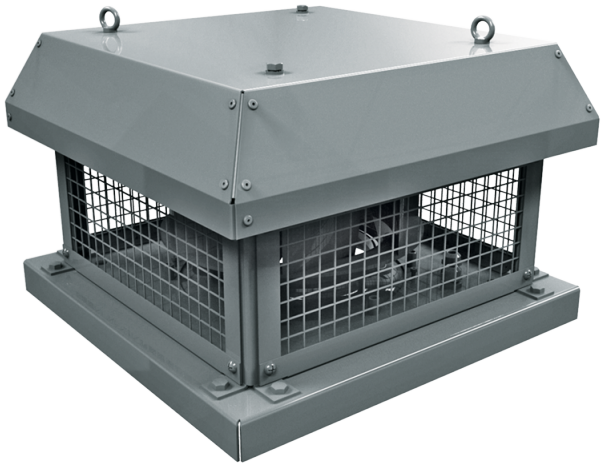

Tower-H 630 6D

Roof centrifugal fans with horizontal air discharge

• Impeller type: Centrifugal impeller with backward curved blades
• Casing material: Coated steel

	Unit of measurement	Tower-H 630 6D
Phases	-	3
Maximum supply voltage	V	400
Minimum supply voltage	V	400
Power supply frequency	Hz	50
Maximum airflow	m³/h	12640
Weight	kg	96.3
Transported air temperature (max)	°C	50
Transported air temperature (min)	°C	-25
Ingress protection rating	-	IPX4
Ingress protection rating of the drive	-	IP54
Impeller material	-	Aluminium
Size	mm	630

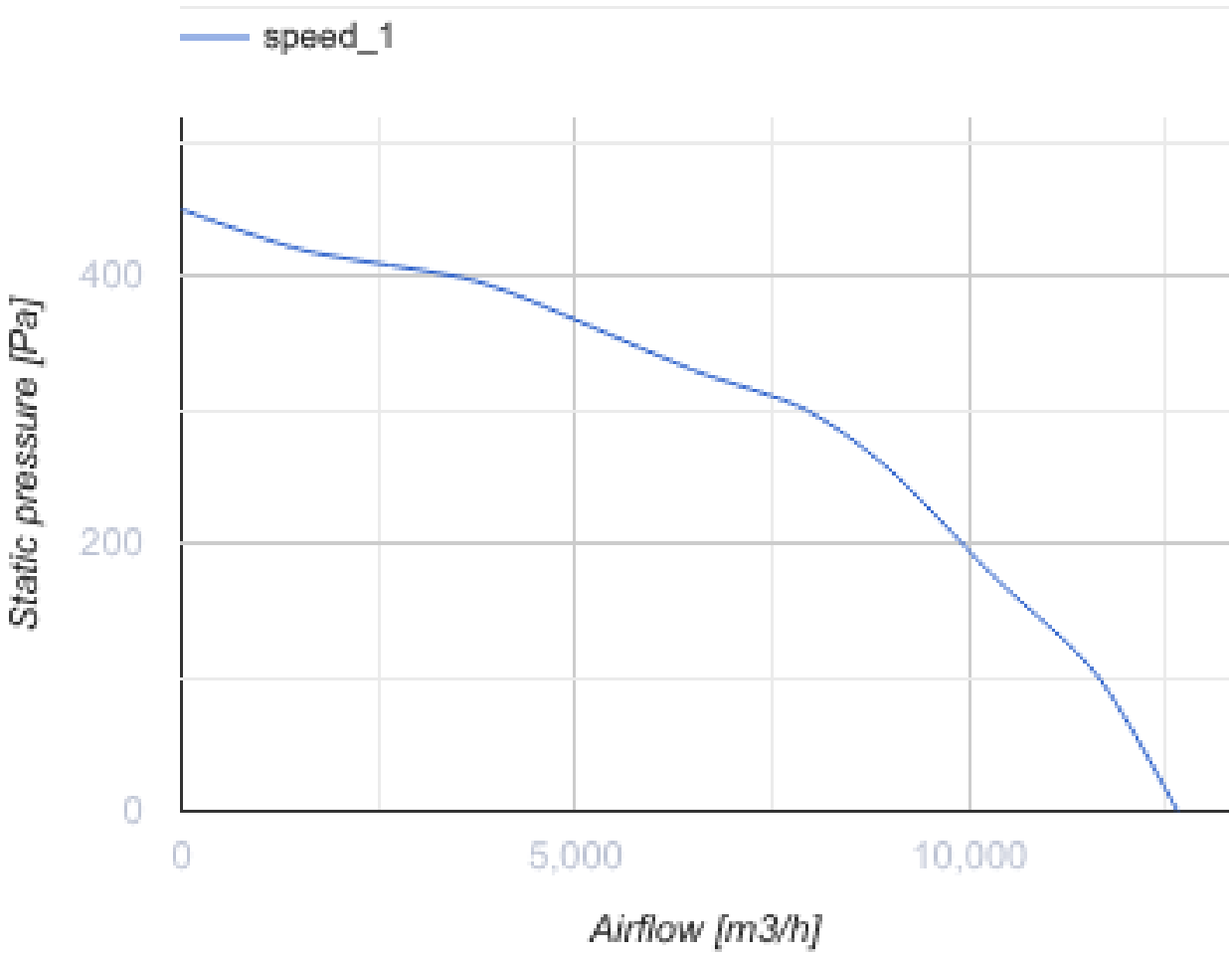
speed_1
Static pressure [Pa]
400
200
0
0
5,000
10,000
Airflow [m3/h]

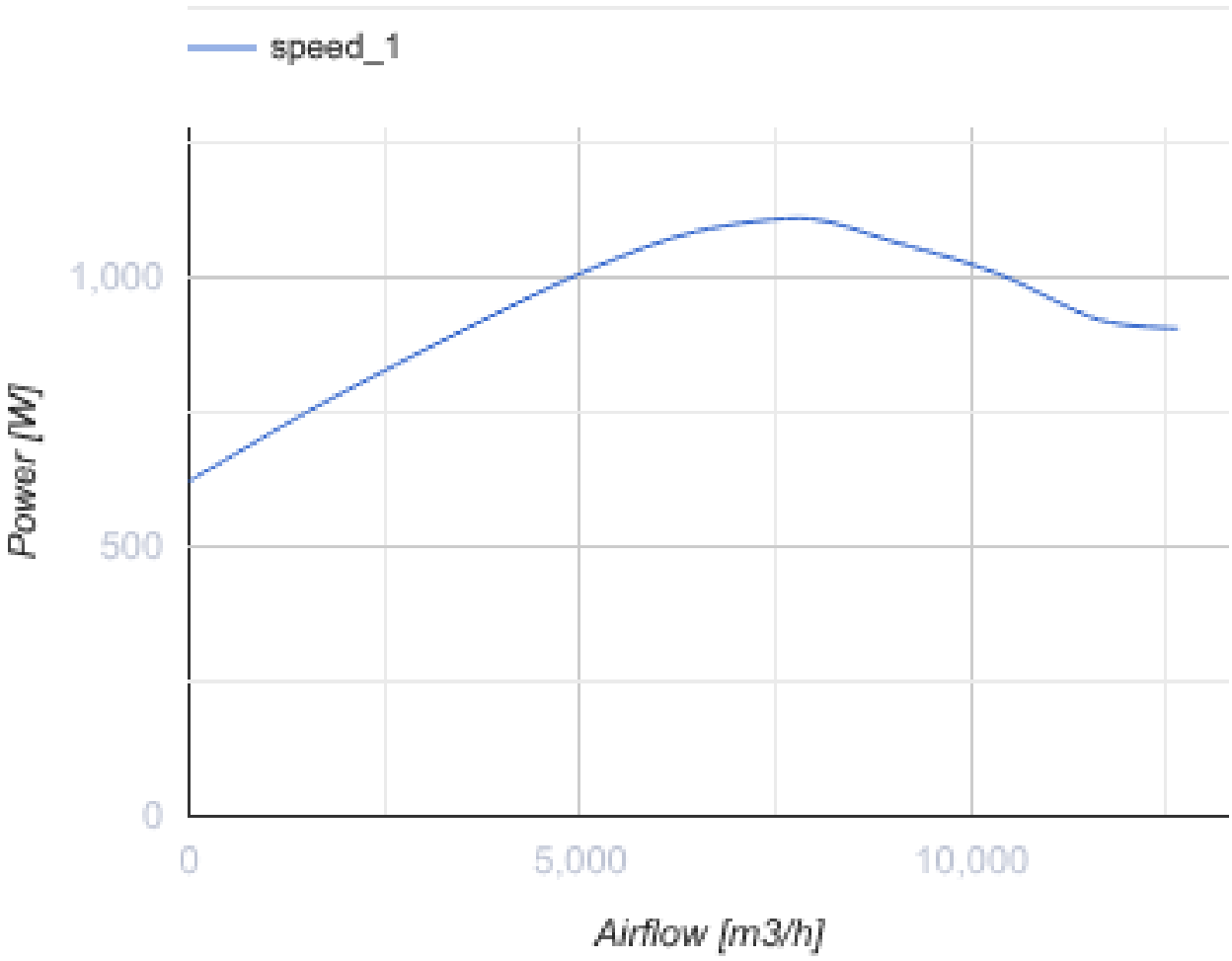

Dimensions

ØD	H	H1	L	L1
600	520	560	1000	990

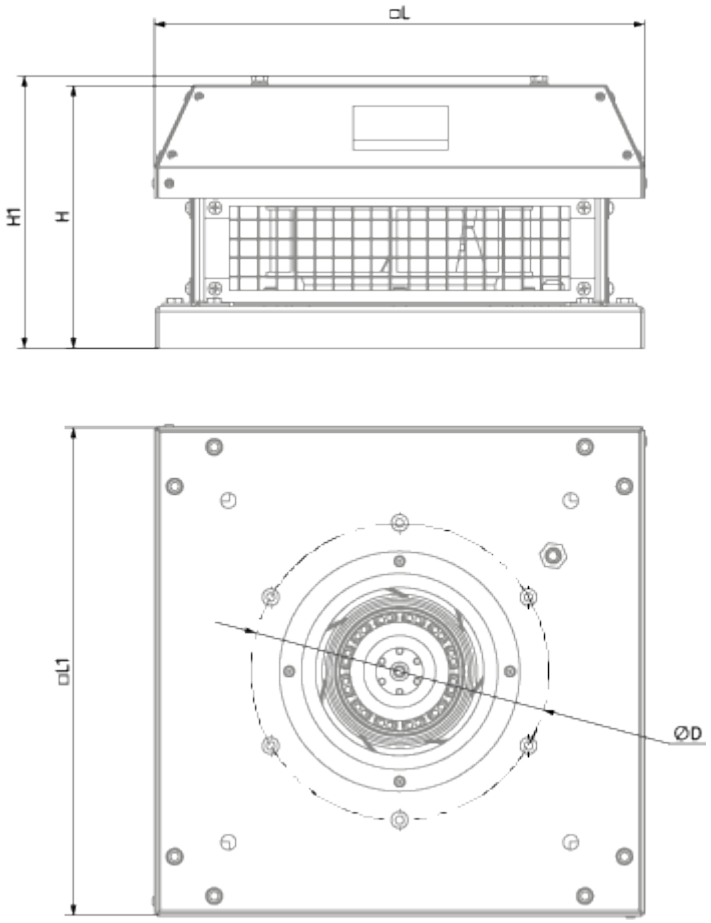

Accessories

Speed controllers

Name	Photo	Description
CDT E1.8		Thyristor speed controller