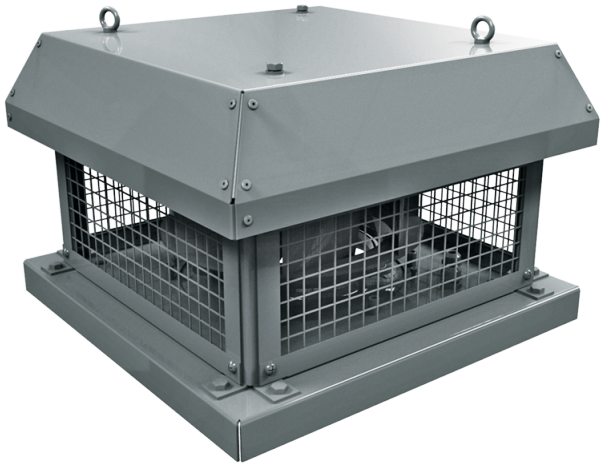

Tower-H 310 4D

Roof centrifugal fans with horizontal air discharge

• Impeller type: Centrifugal impeller with backward curved blades
• Casing material: Coated steel

	Unit of measurement	Tower-H 310 4D
Phases	-	3
Maximum supply voltage	V	400
Minimum supply voltage	V	400
Power supply frequency	Hz	50/60
Maximum airflow	m³/h	2300
Weight	kg	14.2
Transported air temperature (max)	°C	50
Transported air temperature (min)	°C	-25
Ingress protection rating	-	IPX4
Ingress protection rating of the drive	-	IP54
Impeller material	-	Aluminium
Size	mm	310

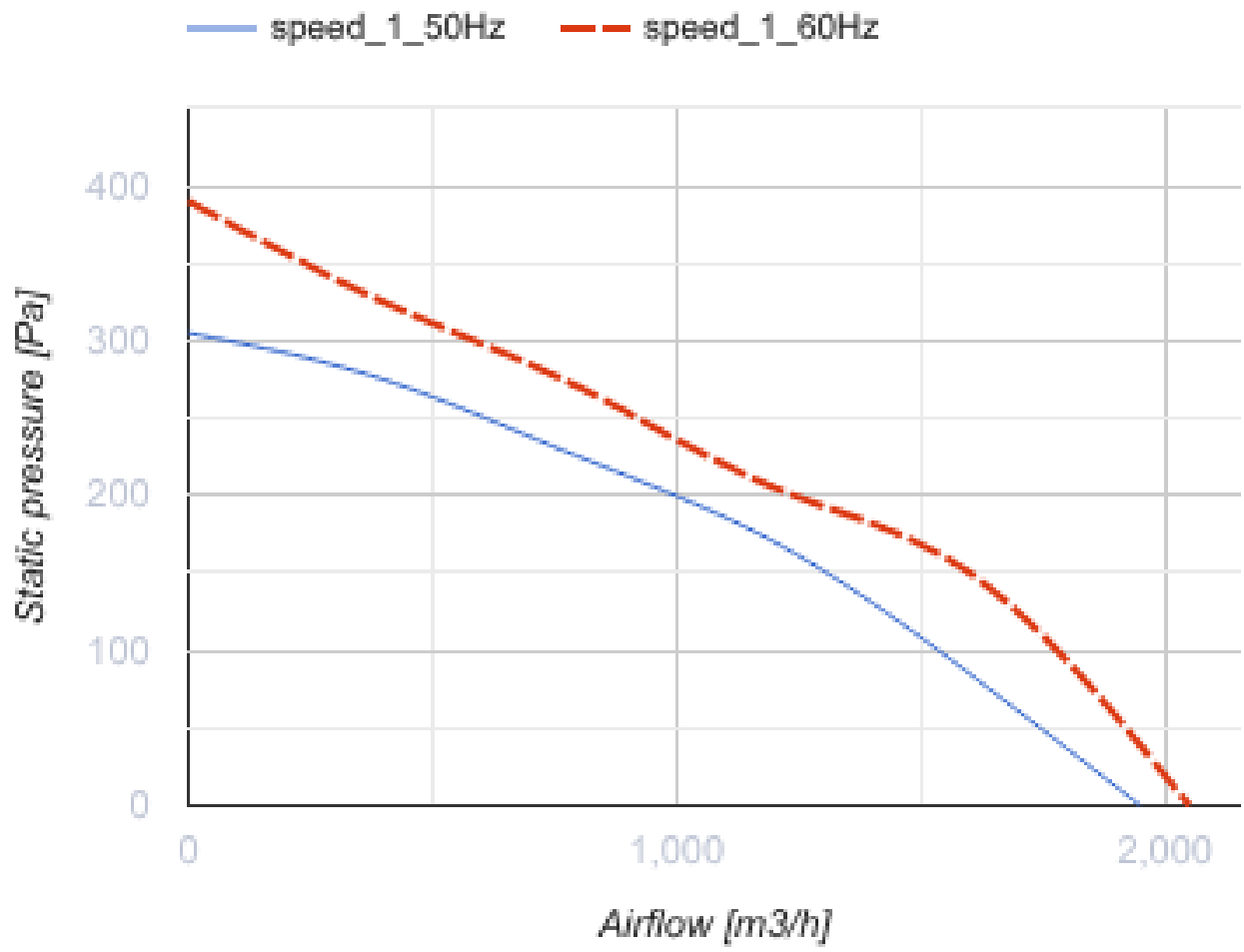
speed_1_50Hz
speed_1_60Hz
Static pressure [Pa]
400
300
200
100
0
0
1,000
2,000
Airflow [m3/h]

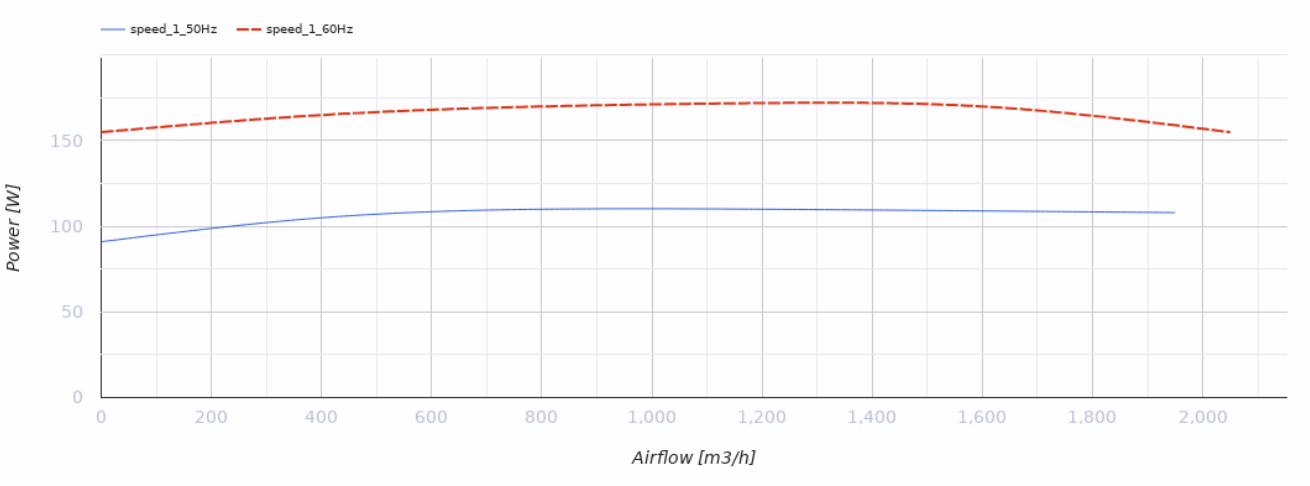
speed_1_50Hz
speed_1_60Hz
Power [W]
150
100
50
0
0
200
400
600
800
1,000
1,200
1,400
1,600
1,800
2,000
Airflow [m3/h]

Dimensions

ØD	H	H1	L	L1
285	287	294	451	450

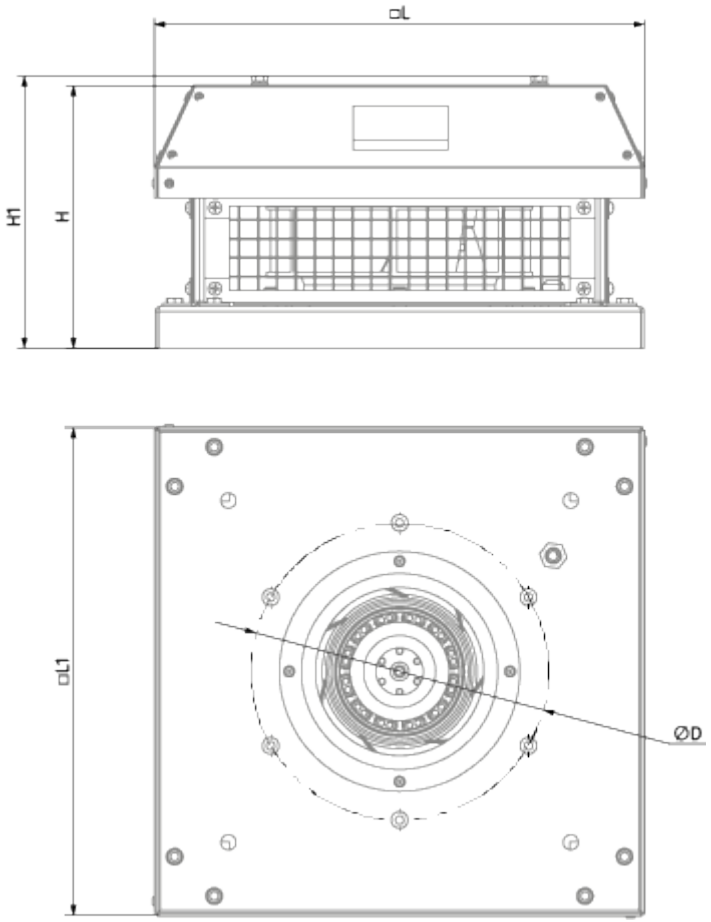

Ecodesign

Trademark	Blauberg
Model	Tower-H 310 4D
Type of ventilation unit	Unidirectional
Type of drive installed	External MSD or VSD
Type of heat recovery system	None
Nominal external pressure (Pa)	212
Maximum external leakage rates (%)	2.7
Static efficiency (%)	61
Sound power level (dB(A))	73
Effective electric power input (kW)	0.09
Declared typology	NRVU UVU

Accessories

Speed controllers

Name	Photo	Description
CDT E1.8		Thyristor speed controller