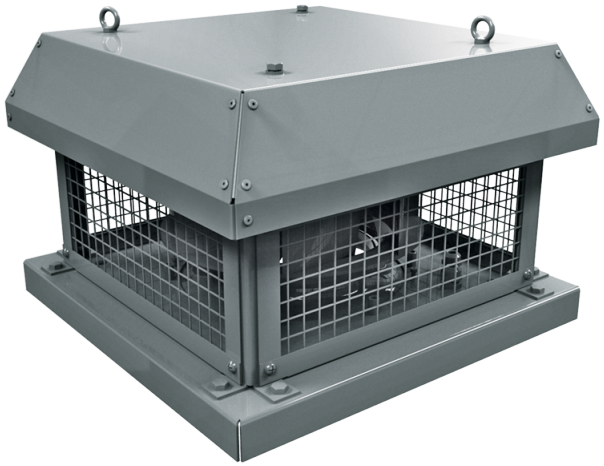

Tower-H 310 2E

Roof centrifugal fans with horizontal air discharge

• Impeller type: Centrifugal impeller with backward curved blades
• Casing material: Coated steel

	Unit of measurement	Tower-H 310 2E
Phases	-	1
Maximum supply voltage	V	230
Minimum supply voltage	V	230
Power supply frequency	Hz	50
Maximum airflow	m³/h	2150
Weight	kg	13.2
Transported air temperature (max)	°C	50
Transported air temperature (min)	°C	-25
Ingress protection rating	-	IPX4
Ingress protection rating of the drive	-	IP44
Impeller material	-	Aluminium
Size	mm	310

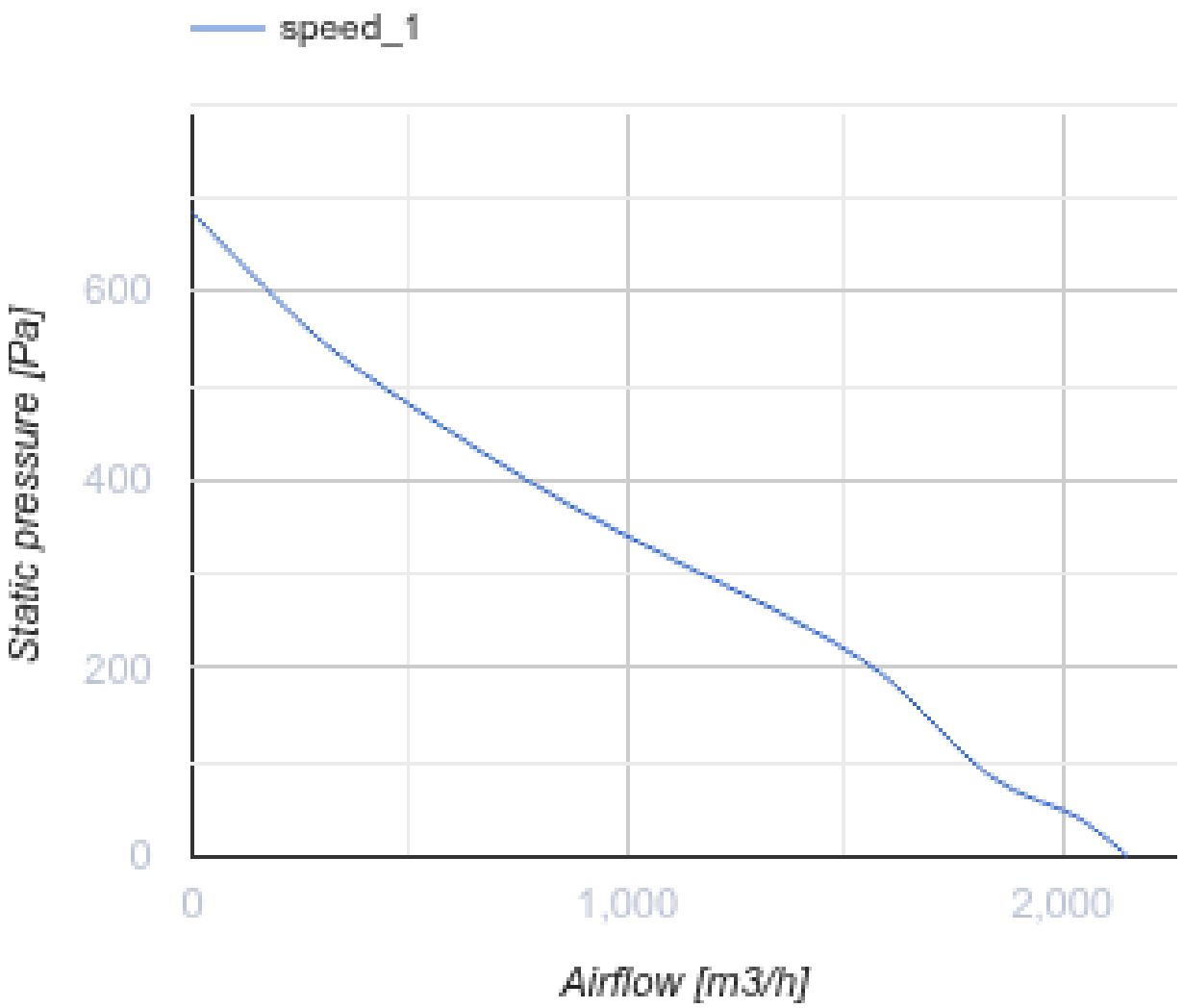
speed_1
Static pressure [Pa]
600
400
200
0
0
1,000
2,000
Airflow [m3/h]

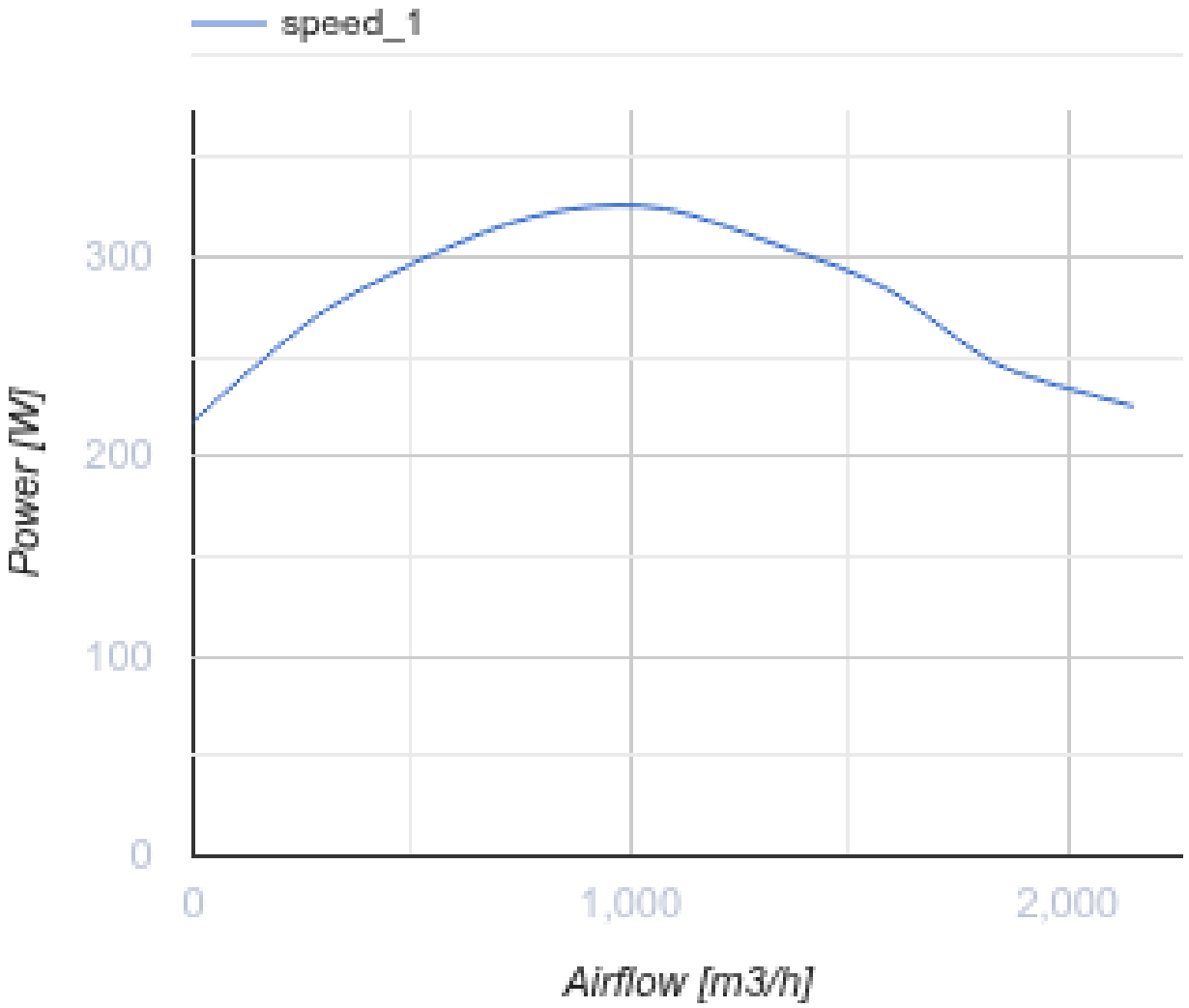

Dimensions

ØD	H	H1	L	L1
291	251	258	451	450

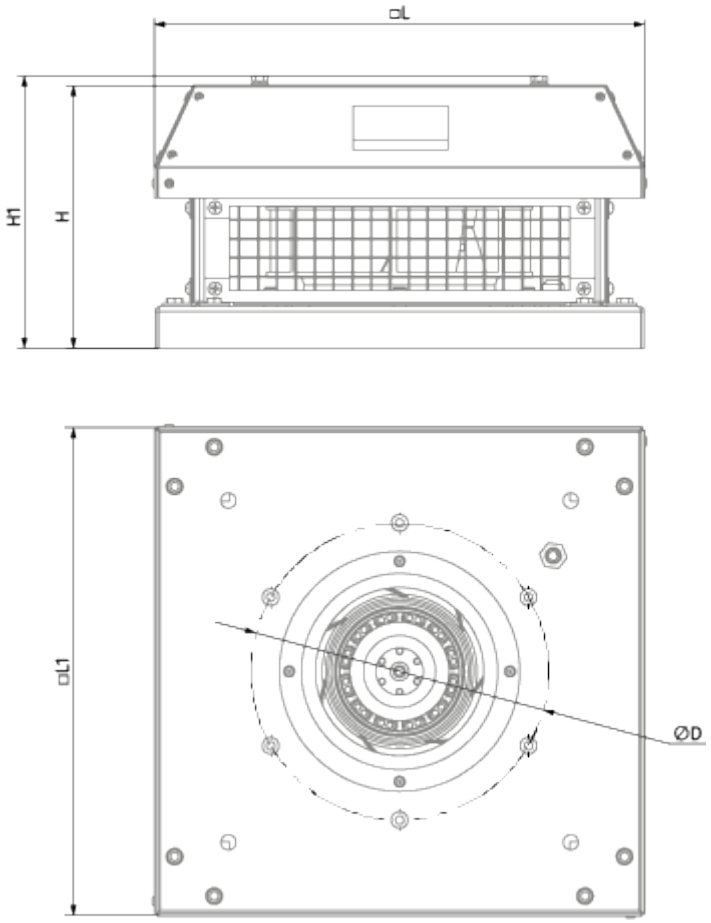

Accessories

Speed controllers

Name	Photo	Description
CDT E1.8		Thyristor speed controller