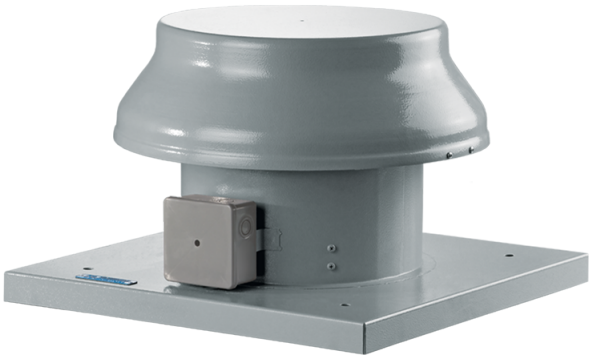

Tower-AL 315

Roof axial fans with aluminium impellers

- Impeller type: Axial
- Casing material: Coated steel

	Unit of measurement	Tower-AL 315
Phases	-	1
Minimum supply voltage	V	220
Maximum supply voltage	V	240
Power supply frequency	Hz	50/60
Maximum airflow	m^3/h	1700
Weight	kg	11.5
Transported air temperature (max)	°C	40
Ingress protection rating	-	IP24
Ingress protection rating of the drive	-	IP44
Impeller material	-	Aluminium
Size	mm	315

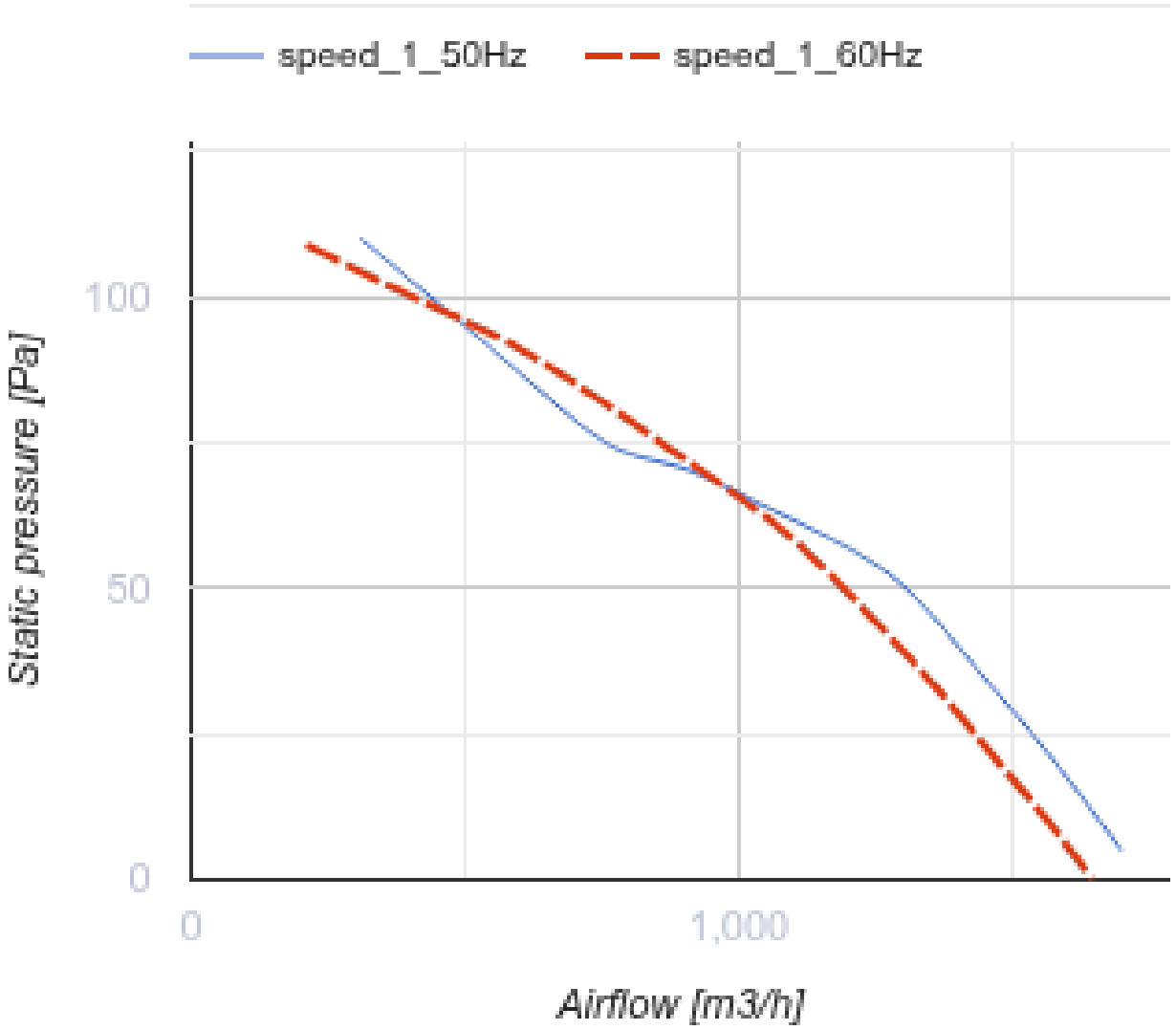
speed_1_50Hz
speed_1_60Hz
100
50
0
Static pressure [Pa]
0
1,000
Airflow [m3/h]

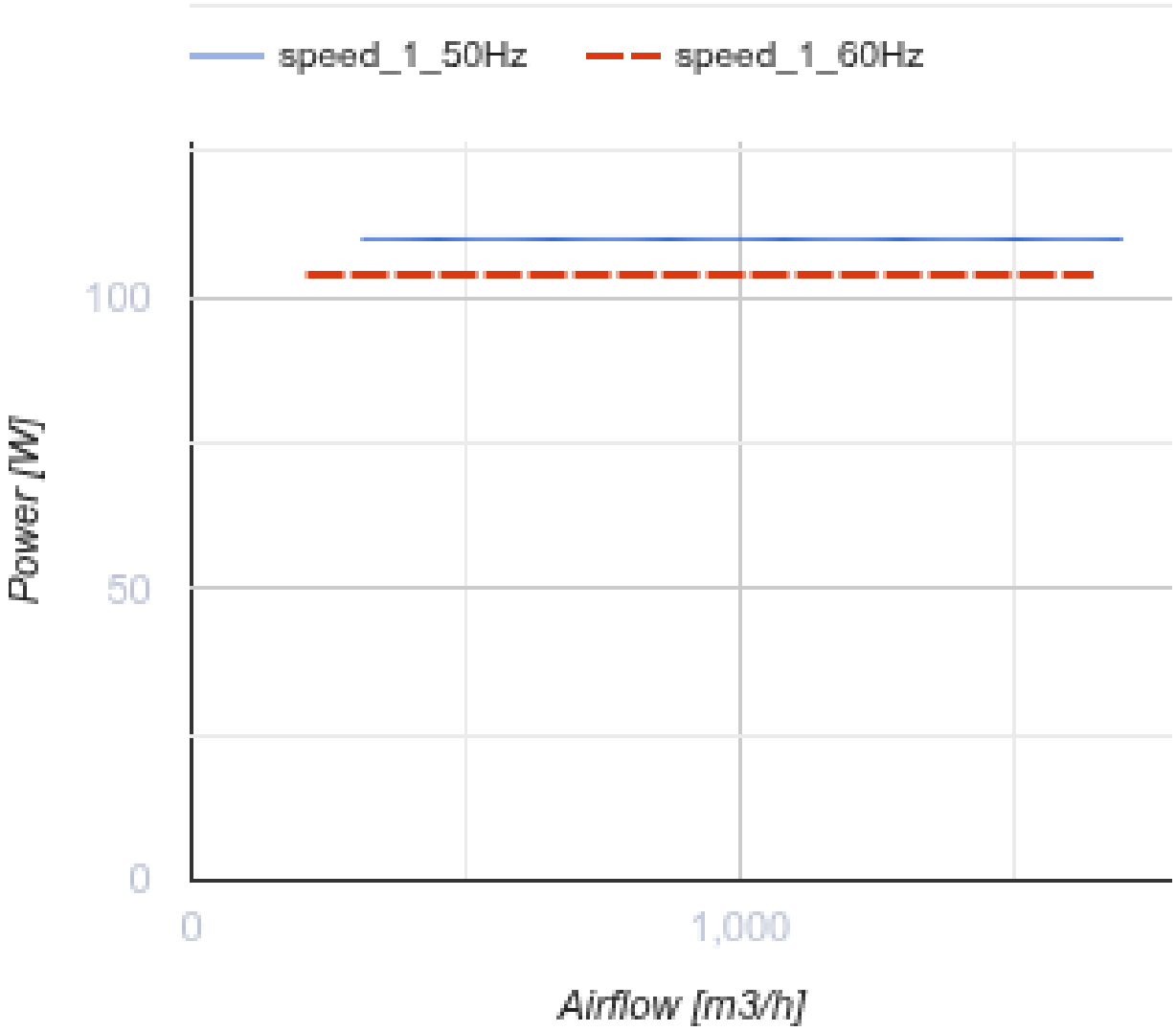

Dimensions

ØD	ØD1	H	L	L1
314	555	380	585	450

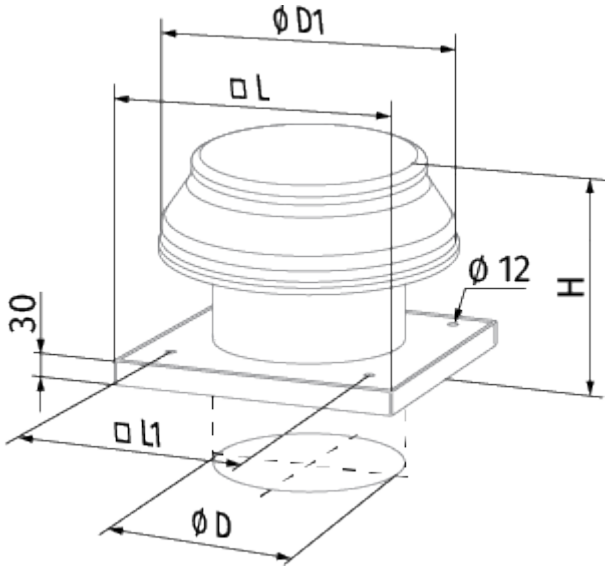
ØD1
□L
Ø 12
H
30
□L1
ØD

Ecodesign

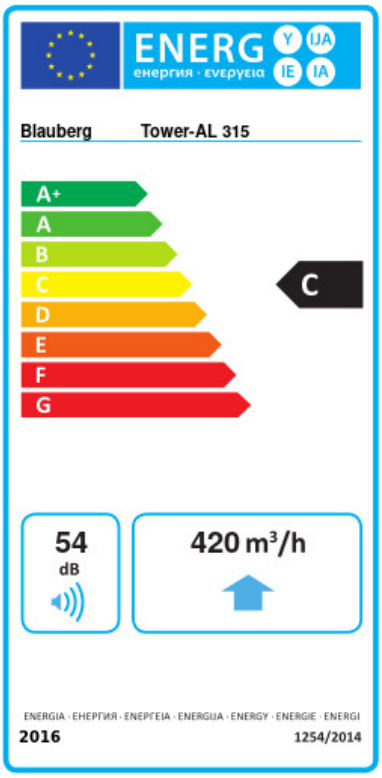

Trademark	Blauberg					
Model	Tower-AL 315					
Specific energy consumption (SEC) (kWh/(m²/a))	Cold		Average		Warm	
	-52.6	A+	-25.6	C	-10.1	E
Type of ventilation unit	Unidirectional					
Type of drive installed	Variable speed					
Type of heat recovery system	None					
Maximum flow rate (m³/h)	420					
Electric power input (W)	110					
Reference flow rate (m³/s)	0.082					
Reference pressure difference (Pa)	50					
Specific power input (SPI) (W/(m³/h))	0.206					
Control typology	Local demand control					
Maximum external leakage rates (%)	2.7					
Declared typology	RVU UVU					
Sound power level (dB(A))	54					
The annual electricity consumption (AEC) (kWh/a)	Cold		Average		Warm	
	109		109		109	
The annual heating saved (AHS) (kWh/a)	Cold		Average		Warm	
	5536		2830		1280	

Accessories

Transformer speed controllers

Name	Photo	Description
CDR5E E3.5 TP		Single phase speed controller
CDR5E E5.0 TP		Single phase speed controller
CDR5E E7.5 TP		Single phase speed controller

CDR5E E1.5 TP		Single phase speed controller