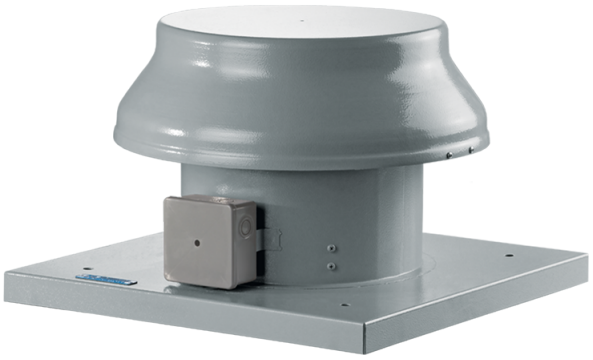

Tower-AL 200

Roof axial fans with aluminium impellers

- Impeller type: Axial
- Casing material: Coated steel

	Unit of measurement	Tower-AL 200
Phases	-	1
Minimum supply voltage	V	220
Maximum supply voltage	V	240
Power supply frequency	Hz	50/60
Maximum airflow	m^3/h	405
Weight	kg	6.1
Transported air temperature (max)	°C	40
Ingress protection rating	-	IP24
Ingress protection rating of the drive	-	IP44
Impeller material	-	Aluminium
Size	mm	200

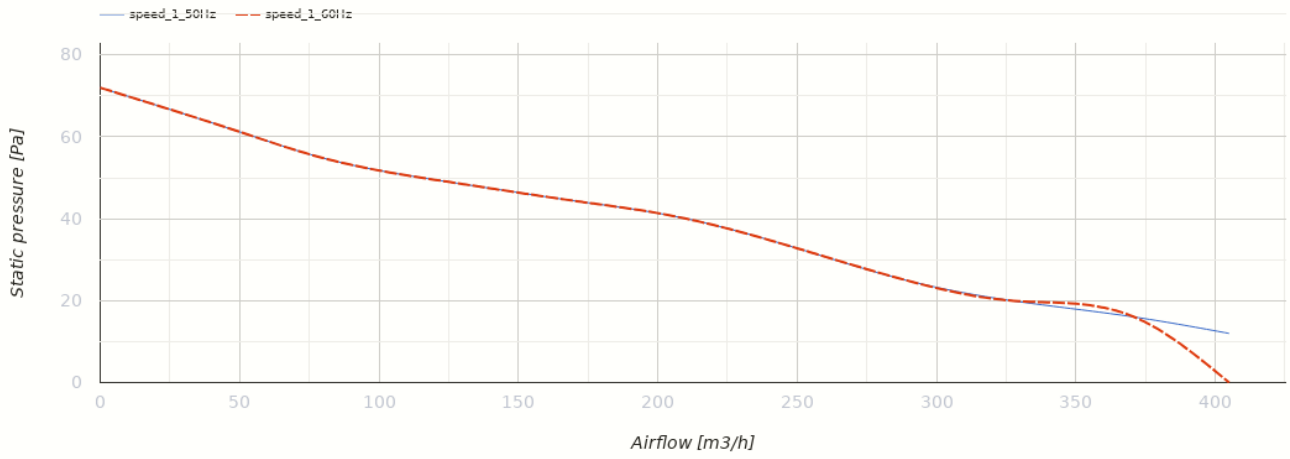

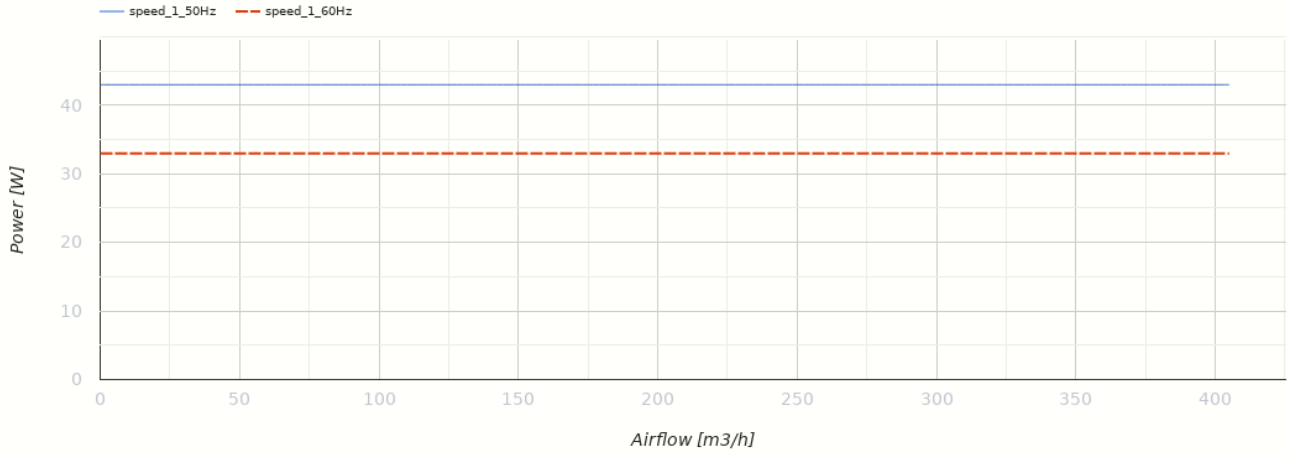

Dimensions

ØD	ØD1	H	L	L1
208	345	280	425	330

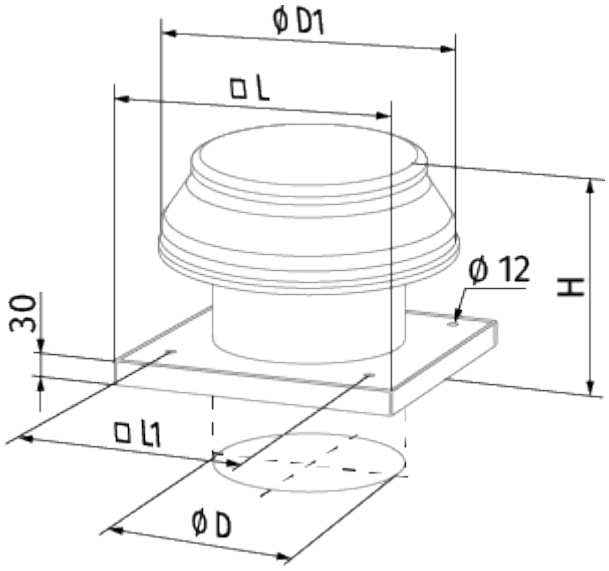
ØD1
□L
Ø 12
H
30
□L1
ØD

Ecodesign

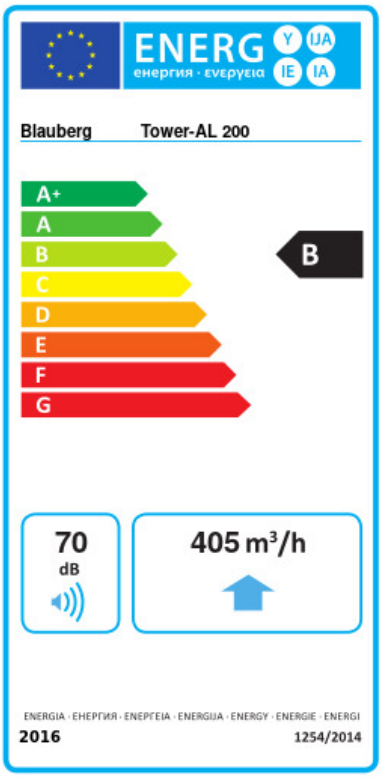

Trademark	Blauberg					
Model	Tower-AL 200					
Specific energy consumption (SEC) (kWh/(m²/a))	Cold		Average		Warm	
	-53.8	A+	-26.7	B	-11.2	E
Type of ventilation unit	Unidirectional					
Type of drive installed	Variable speed					
Type of heat recovery system	None					
Maximum flow rate (m³/h)	405					
Electric power input (W)	43					
Reference flow rate (m³/s)	0.079					
Specific power input (SPI) (W/(m³/h))	0.121					
Control typology	Local demand control					
Maximum external leakage rates (%)	2.7					
Sound power level (dB(A))	70					
Declared typology	RVU UVU					
The annual electricity consumption (AEC) (kWh/a)	Cold		Average		Warm	
	64		64		64	
The annual heating saved (AHS) (kWh/a)	Cold		Average		Warm	
	5536		2830		1280	

Accessories

Transformer speed controllers

Name	Photo	Description
CDR5E E3.5 TP		Single phase speed controller
CDR5E E5.0 TP		Single phase speed controller
CDR5E E7.5 TP		Single phase speed controller

CDR5E E1.5 TP		Single phase speed controller