

Tower-A 200 2E

Roof axial fans

- Impeller type: Axial
- Casing material: Coated steel

	Unit of measurement	Tower-A 200 2E
Phases	-	1
Maximum supply voltage	V	240
Minimum supply voltage	V	220
Power supply frequency	Hz	50/60
Maximum airflow	m^3/h	860
Weight	kg	5
Transported air temperature (max)	°C	60
Transported air temperature (min)	°C	-30
Ingress protection rating	-	IP24
Ingress protection rating of the drive	-	IP44
Impeller material	-	Coated steel
Size	mm	200

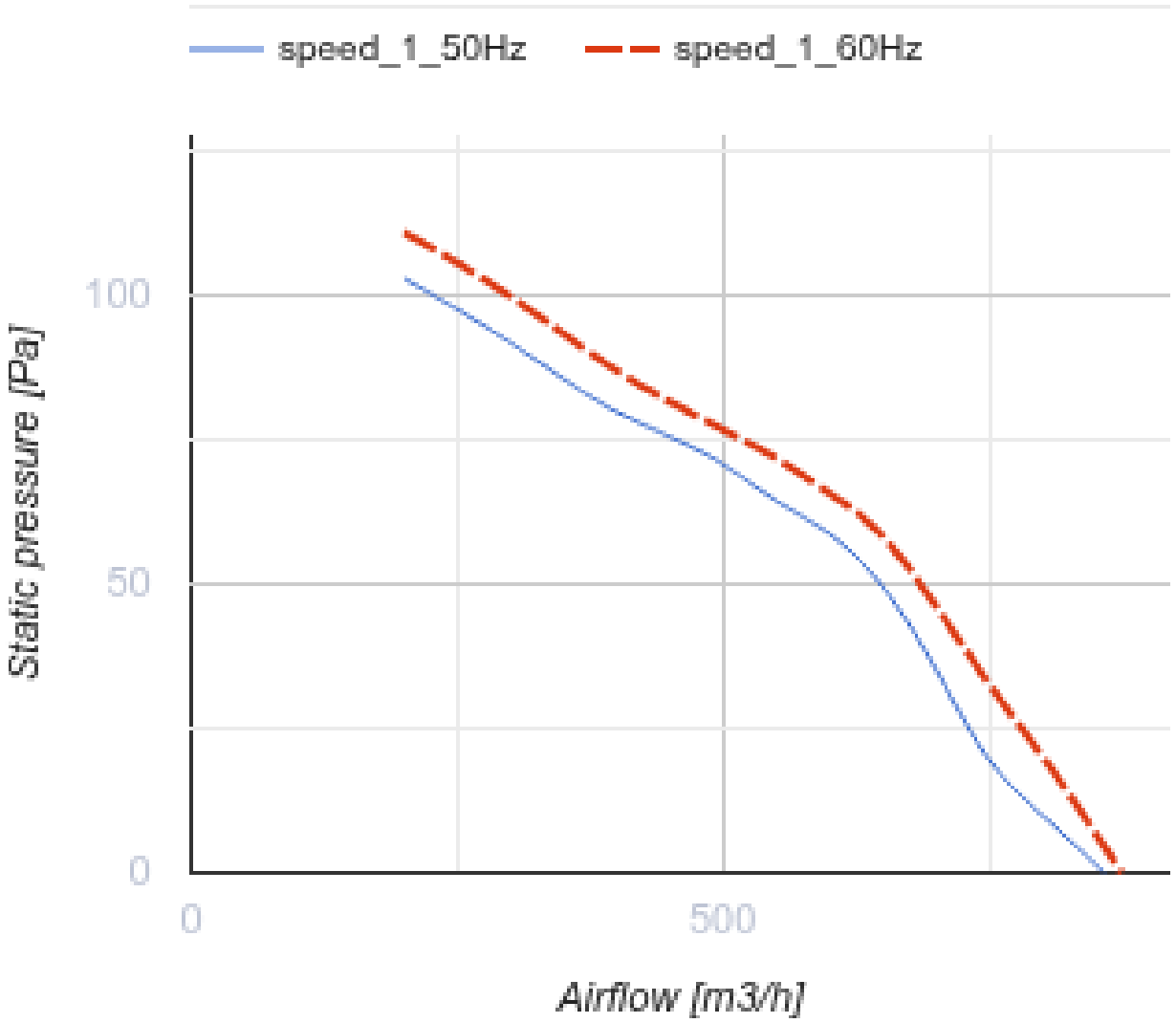
speed_1_50Hz
speed_1_60Hz
100
50
0
Static pressure [Pa]
0
500
Airflow [m3/h]

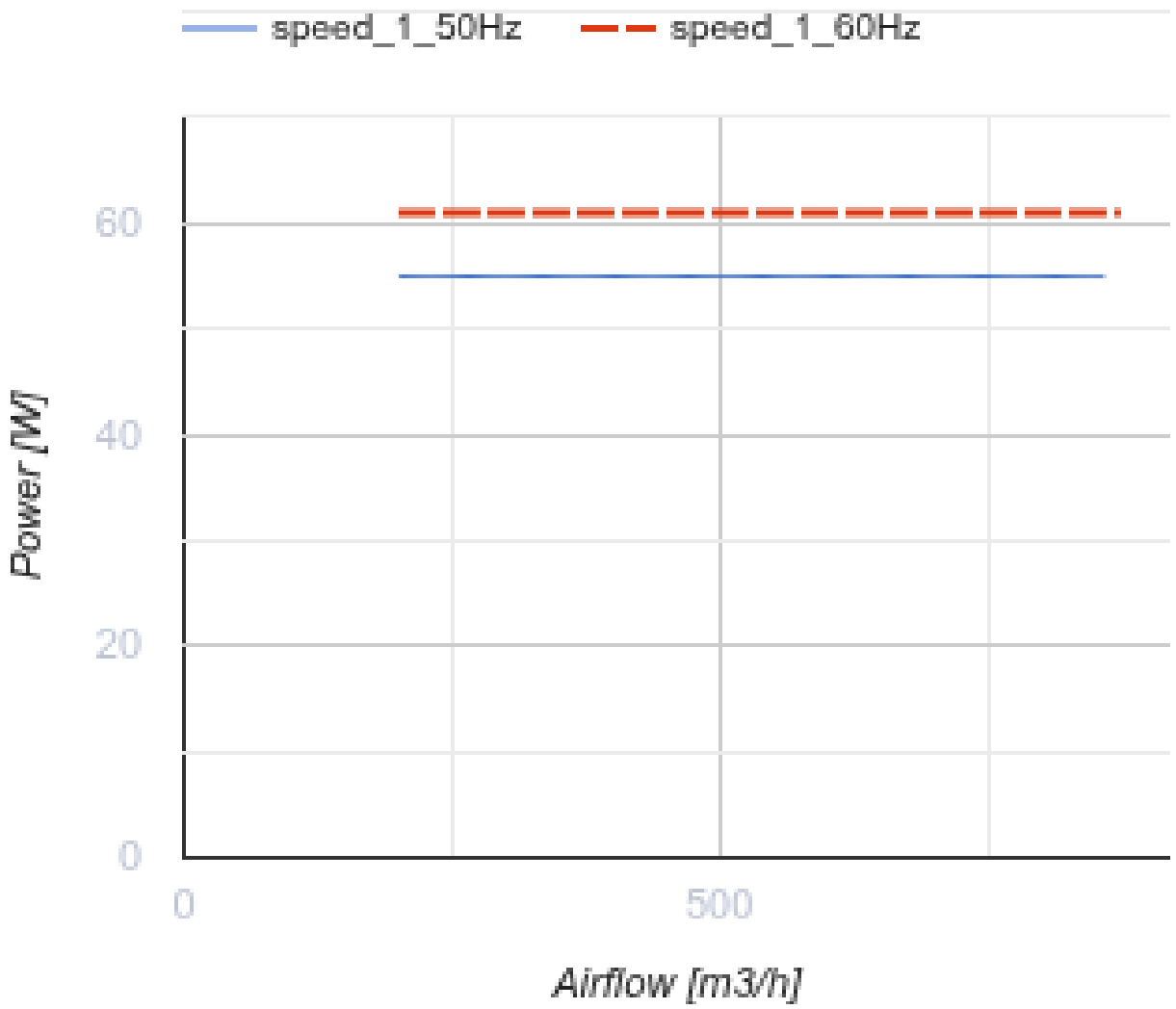

Dimensions

ØD	ØD1	H	L	L1
208	345	280	425	330

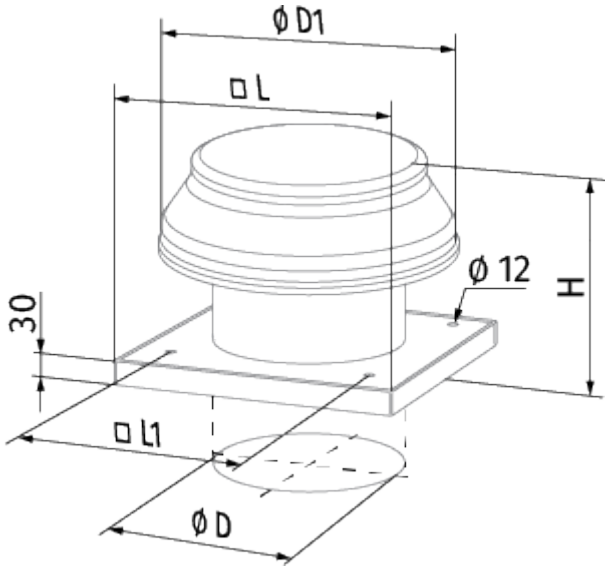
ØD1
□L
Ø 12
H
30
□L1
ØD

Ecodesign

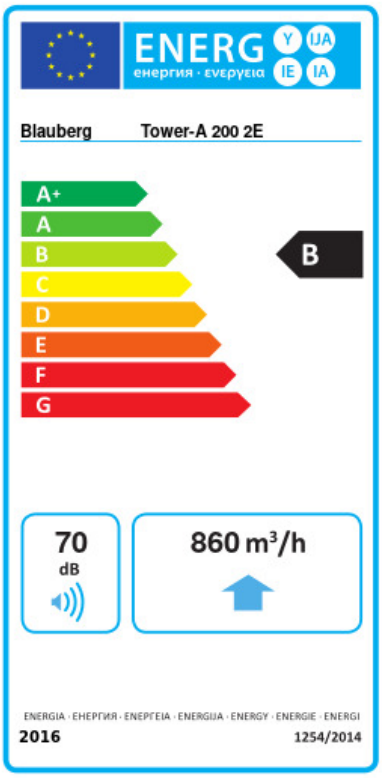

Trademark	Blauberg					
Model	Tower-A 200 2E					
Specific energy consumption (SEC) (kWh/(m²/a))	Cold		Average		Warm	
	-54.4	A+	-27.3	B	-11.8	E
Type of ventilation unit	Unidirectional					
Type of drive installed	Variable speed					
Type of heat recovery system	None					
Maximum flow rate (m³/h)	860					
Electric power input (W)	55					
Reference flow rate (m³/s)	0.167					
Specific power input (SPI) (W/(m³/h))	0.073					
Control typology	Local demand control					
Maximum external leakage rates (%)	2.7					
Sound power level (dB(A))	70					
Declared typology	RVU UVU					
The annual electricity consumption (AEC) (kWh/a)	Cold		Average		Warm	
	39		39		39	
The annual heating saved (AHS) (kWh/a)	Cold		Average		Warm	
	5536		2830		1280	

Accessories

Transformer speed controllers

Name	Photo	Description
CDR5E E3.5 TP		Single phase speed controller
CDR5E E5.0 TP		Single phase speed controller
CDR5E E7.5 TP		Single phase speed controller

CDR5E E1.5 TP		Single phase speed controller