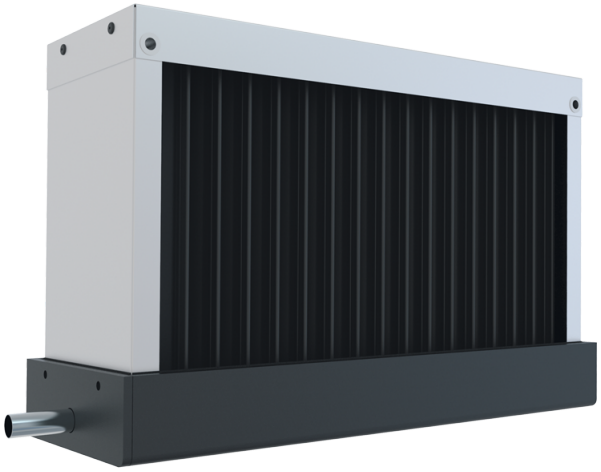

TA 800x500

Droplet separators

- Casing material: Galvanized steel

	Unit of measurement	TA 800x500
Weight	kg	11.7

Dimensions

A	B	C
903	593	163

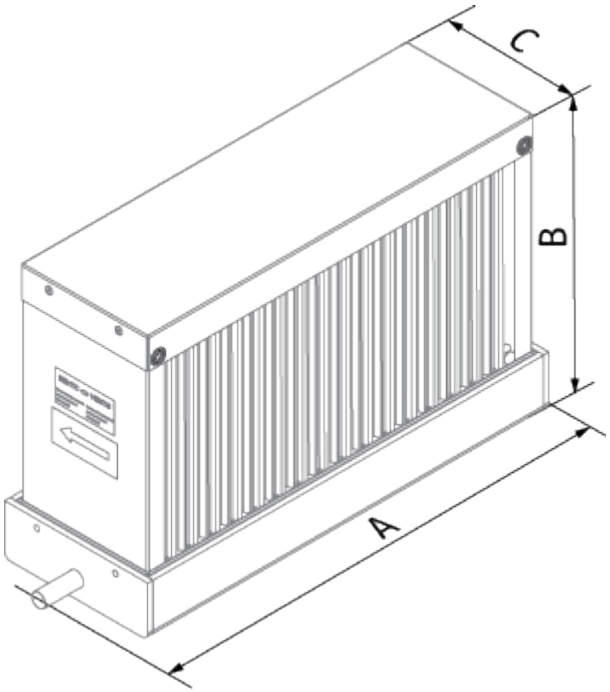
C
B
A