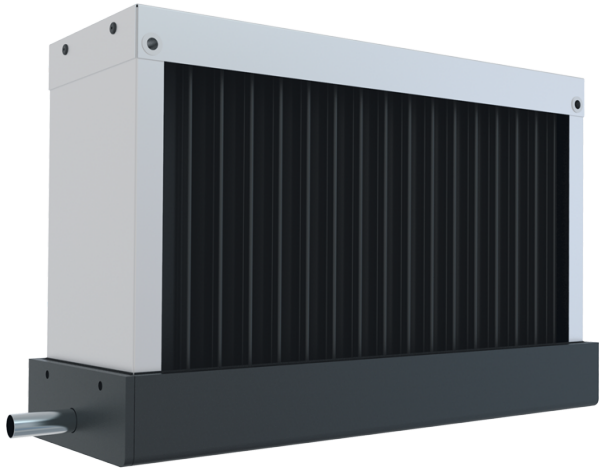

TA 700x400

Droplet separators

- Casing material: Galvanized steel

	Unit of measurement	TA 700x400
Weight	kg	9.3

Dimensions

A	B	C
803	493	163

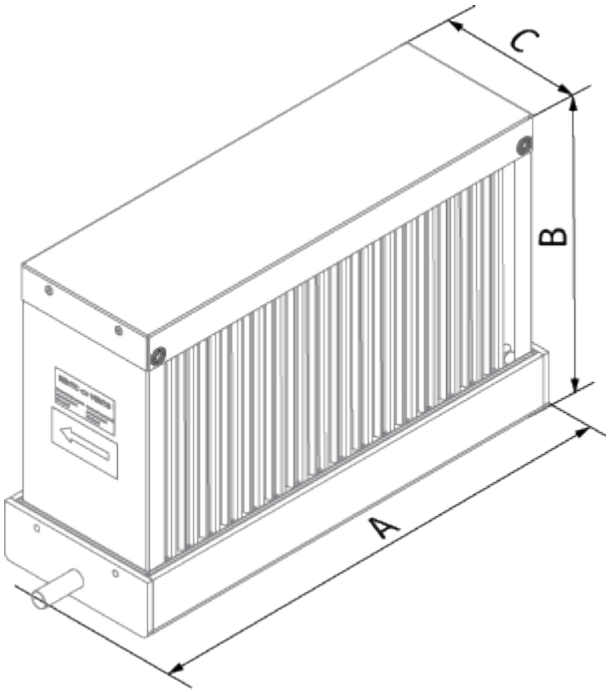
C
B
A