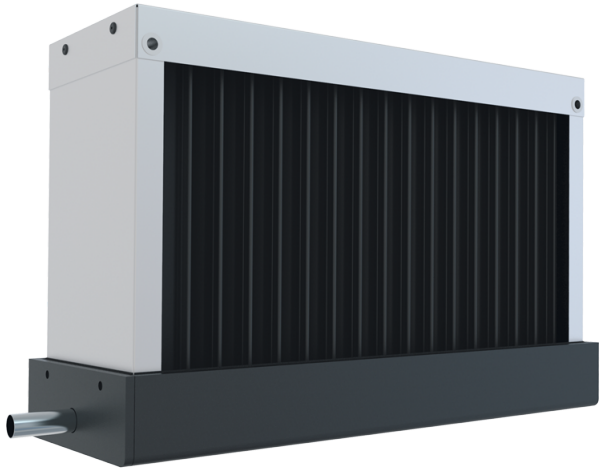

TA 600x350

Droplet separators

- Casing material: Galvanized steel

	Unit of measurement	TA 600x350
Weight	kg	7.7

Dimensions

A	B	C
703	443	163

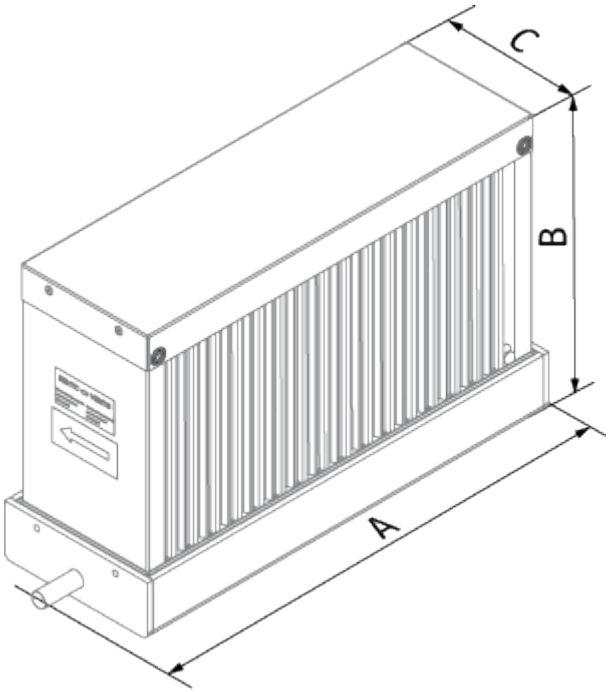
C
B
A