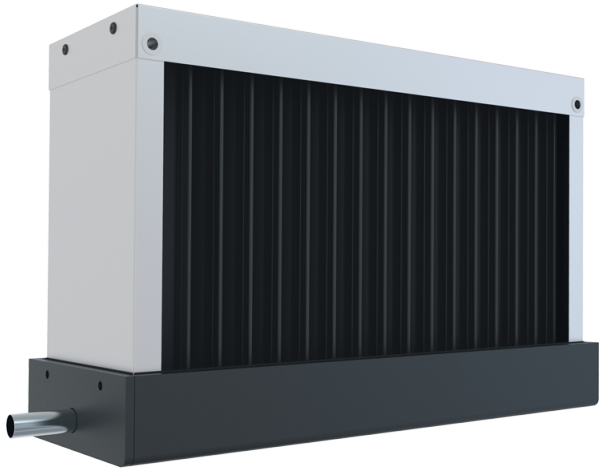

TA 500x300

Droplet separators

- Casing material: Galvanized steel

	Unit of measurement	TA 500x300
Weight	kg	6.2

Dimensions

A	B	C
603	393	163

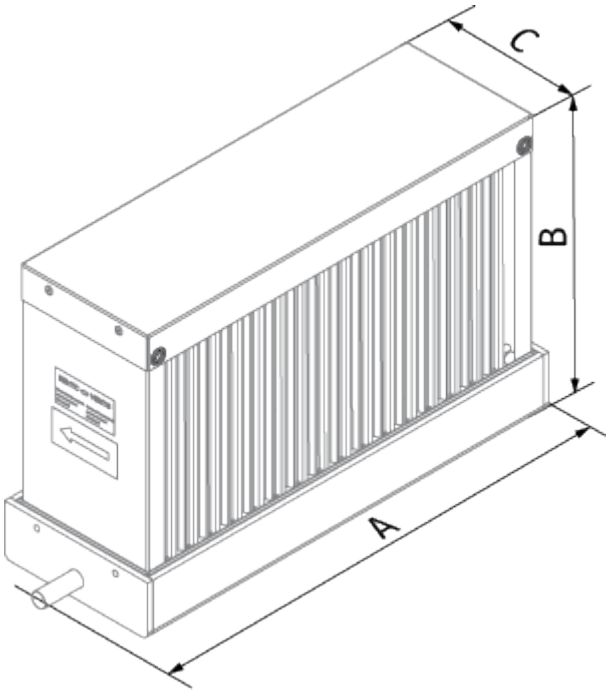
C
B
A