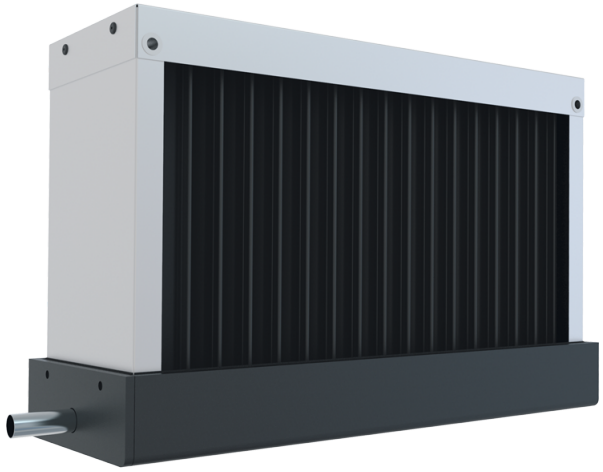

TA 1000x500

Droplet separators

- Casing material: Galvanized steel

	Unit of measurement	TA 1000x500
Weight	kg	14.2

Dimensions

A	B	C
1103	593	163

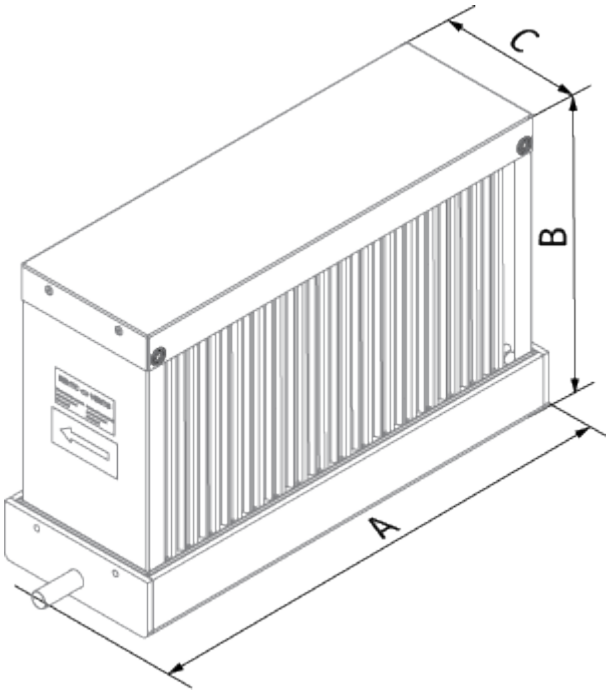
C
B
A