

Slim 120

Extract fans

- Casing material: Plastic
- Backdraft protection: Backdraft damper

	Unit of measurement	Slim 120
Minimum supply voltage	V	220
Maximum supply voltage	V	240
Power supply frequency	Hz	50
Maximum airflow	m³/h	184
Ambient air temperature min	°C	1
Ambient air temperature max	°C	40
Ingress protection rating	-	IP24
Impeller material	-	Plastic

Dimensions

a	c	Ø d	e
176	94	117	13

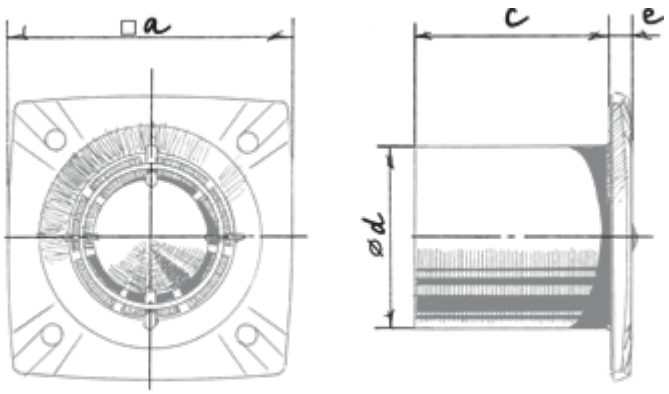
□a
c
e
ød

Ecodesign

Trademark	Blauberg					
Model	Slim 120					
Specific energy consumption (SEC) (kWh/(m²/a))	Cold		Average		Warm	
	-30.7	B	-14.3	E	-4.9	F
Type of ventilation unit	Unidirectional					
Type of drive installed	Single speed					
Type of heat recovery system	None					
Maximum flow rate (m³/h)	184					
Electric power input (W)	17					
Reference flow rate (m³/s)	0.036					
Specific power input (SPI) (W/(m³/h))	0.092					
Control typology	Manual control					
Maximum external leakage rates (%)	2.7					
Declared typology	RVU UVU					
Sound power level (dB(A))	55					
The annual electricity consumption (AEC) (kWh/a)	Cold		Average		Warm	
	116		116		116	
The annual heating saved (AHS) (kWh/a)	Cold		Average		Warm	
	3355		1715		776	

Accessories

Speed controllers

Name	Photo	Description
CDT E1.8		Thyristor speed controller