

Sileo V2 125 T

High-performance low noise extract fans

- Casing material: Plastic
- Backdraft protection: Backdraft damper
- Timer: Internal timer, Turn off timer, Turn on timer

	Unit of measurement	Sileo V2 125 T	
Speed	-	1	2
Minimum supply voltage	V	220	
Maximum supply voltage	V	240	
Power supply frequency	Hz	50	
Maximum airflow	m³/h	145	170
Weight	kg	0.78	
Ambient air temperature min	°C	1	
Ambient air temperature max	°C	45	
Ingress protection rating	-	IP45	
Impeller material	-	Plastic	

Dimensions

a	b	c	Ø d	e
168	182	91	124	27

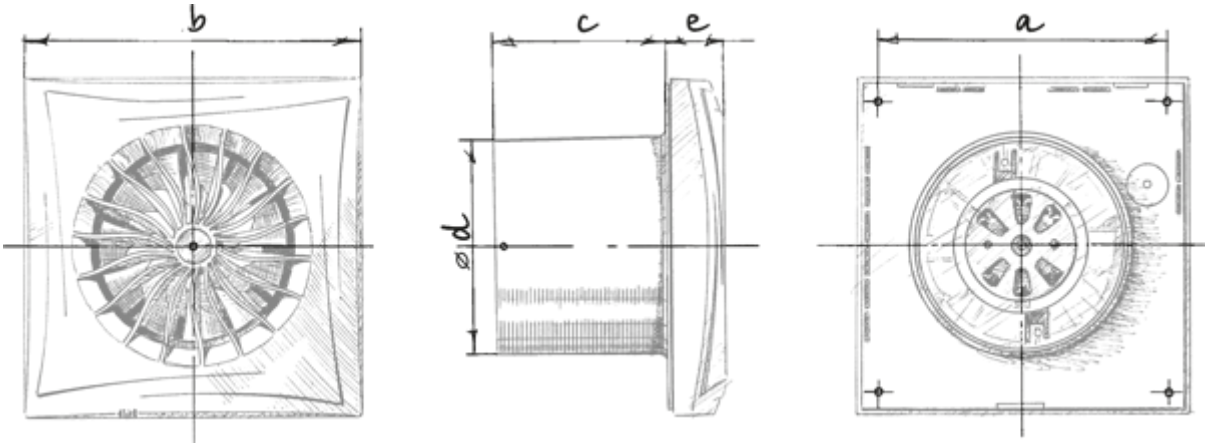
b
c
e
a
ød

Ecodesign

Trademark	Blauberg					
Model	Sileo V2 125 T					
Specific energy consumption (SEC) (kWh/(m²/a))	Cold		Average		Warm	
	-34.7	A	-16.8	E	-6.5	F
Type of ventilation unit	Unidirectional					
Type of drive installed	2-speed					
Type of heat recovery system	None					
Maximum flow rate (m³/h)	170					
Electric power input (W)	13.5					
Reference flow rate (m³/s)	0.04					
Specific power input (SPI) (W/(m³/h))	0.066					
Control typology	Manual control					
Maximum external leakage rates (%)	2.7					
Declared typology	RVU UVU					
Sound power level (dB(A))	48					
The annual electricity consumption (AEC) (kWh/a)	Cold		Average		Warm	
	77		77		77	
The annual heating saved (AHS) (kWh/a)	Cold		Average		Warm	
	3667		1874		848	