

# Sileo Pro 100 HA

Redesigned axial low-noise fans for extract ventilation

- Impeller type: Axial
- Casing material: Plastic
- Short spigot
- Backdraft protection: Backdraft damper
- Humidity sensor
- Timer: Adaptive timer

| | Unit of measurement | Sileo Pro 100 HA |
|---|---|---|
| Maximum supply voltage | V | 240 |
| Minimum supply voltage | V | 220 |
| Power supply frequency | Hz | 50 |
| Maximum airflow | m³/h | 105 |
| Ambient air temperature min | °C | 1 |
| Ambient air temperature max | °C | 40 |
| Ingress protection rating | - | IP45 |
| Impeller material | - | Plastic |

## Dimensions

| ØD | H | L | L1 |
|---|---|---|---|
| 100 | 158 | 81 | 26 |

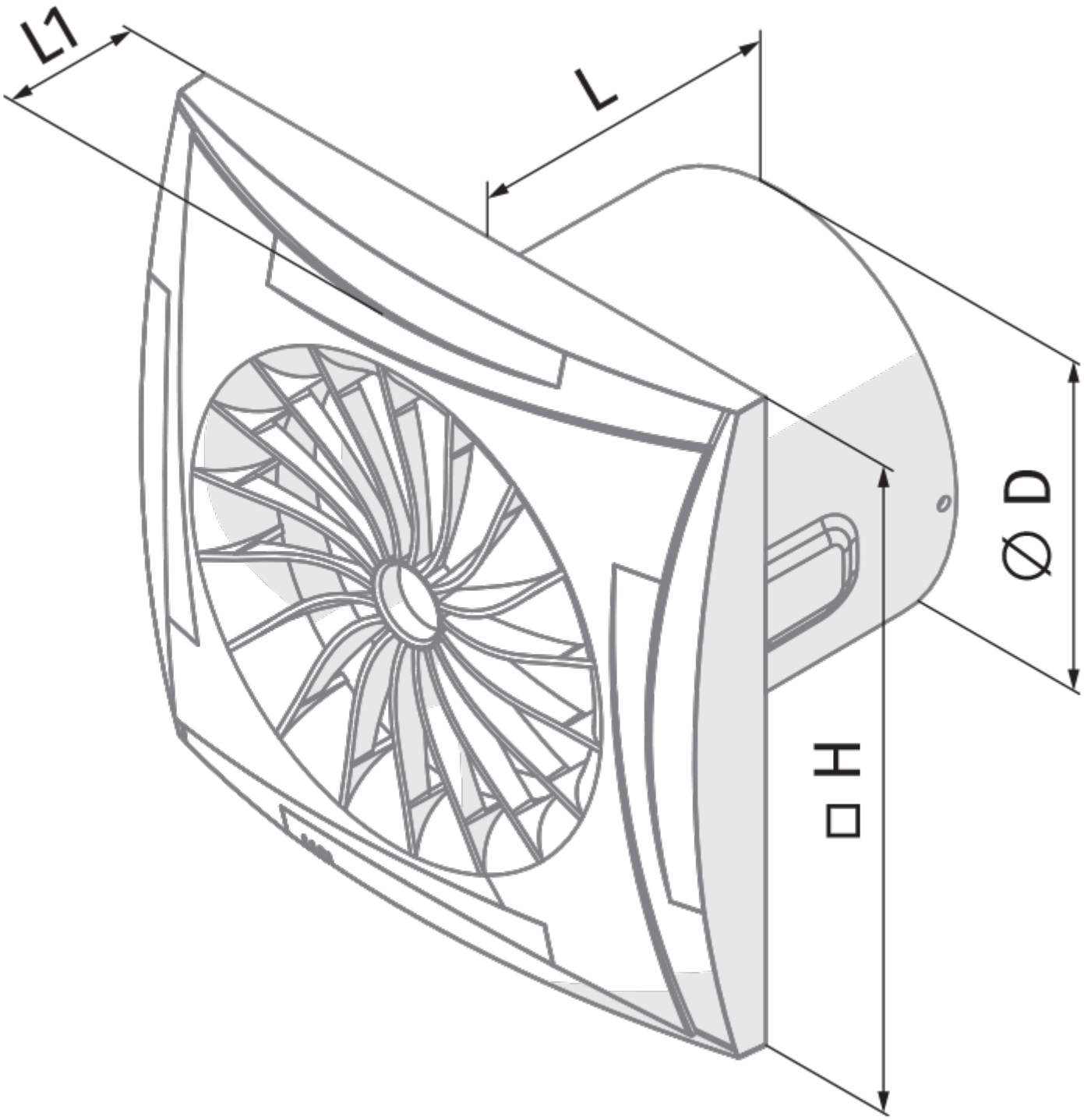
L1
L
Ø D
□ H

## Ecodesign

| | | | | | | |
|---|---|---|---|---|---|---|
| Trademark | Blauberg | | | | | |
| Model | Sileo Pro 100 HA | | | | | |
| Specific energy consumption (SEC) (kWh/(m²/a)) | Cold | | Average | | Warm | |
| | -31.1 | B | -14.7 | E | -5.3 | F |
| Type of ventilation unit | Unidirectional | | | | | |
| Type of drive installed | Single speed | | | | | |
| Type of heat recovery system | None | | | | | |
| Maximum flow rate (m³/h) | 97 | | | | | |
| Electric power input (W) | 7.5 | | | | | |
| Reference flow rate (m³/s) | 0.019 | | | | | |
| Specific power input (SPI) (W/(m³/h)) | 0.077 | | | | | |
| Control typology | Manual control | | | | | |
| Maximum external leakage rates (%) | 2.7 | | | | | |
| Sound power level (dB(A)) | 45 | | | | | |
| Declared typology | RVU UVU | | | | | |
| The annual electricity consumption (AEC) (kWh/a) | Cold | | Average | | Warm | |
| | 97 | | 97 | | 97 | |
| The annual heating saved (AHS) (kWh/a) | Cold | | Average | | Warm | |
| | 3355 | | 1715 | | 776 | |