

Sileo Design V2 100 S

High-performance low noise extract fans

- Impeller type: Mixed-flow
- Casing material: Plastic
- Backdraft protection: Backdraft damper
- Pull cord

	Unit of measurement	Sileo Design V2 100 S	
Speed	-	1	2
Minimum supply voltage	V	220	
Maximum supply voltage	V	240	
Power supply frequency	Hz	50	
Maximum airflow	m³/h	60	90
Weight	kg	0.66	
Ambient air temperature min	°C	1	
Ambient air temperature max	°C	40	
Ingress protection rating	-	IP45	
Impeller material	-	Plastic	

Dimensions

Ø D	B	L	L1
99	200	130	49

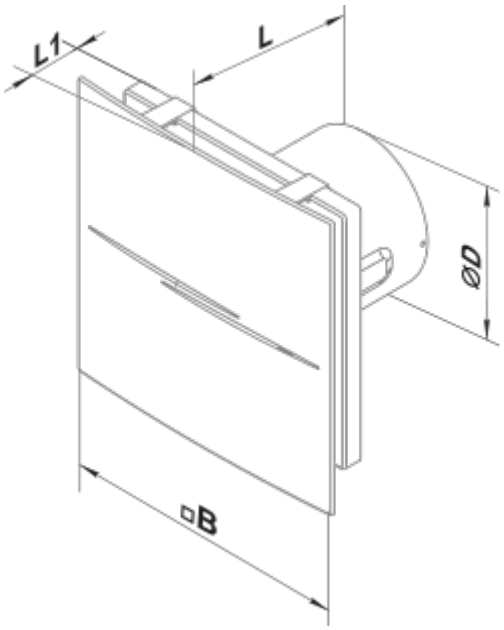
L1
L
ØD
□B

Ecodesign

Trademark	Blauberg					
Model	Sileo Design V2 100 S					
Specific energy consumption (SEC) (kWh/(m²/a))	Cold		Average		Warm	
	30.9	B	14.5	E	5.1	F
Type of ventilation unit	Unidirectional					
Type of drive installed	Single speed					
Type of heat recovery system	None					
Maximum flow rate (m³/h)	90					
Electric power input (W)	7.5					
Reference flow rate (m³/s)	0.018					
Specific power input (SPI) (W/(m³/h))	0.083					
Control typology	Manual control					
Maximum external leakage rates (%)	2.7					
Declared typology	RVU UVU					
Sound power level (dB(A))	46					
The annual electricity consumption (AEC) (kWh/a)	Cold		Average		Warm	
	104		104		104	
The annual heating saved (AHS) (kWh/a)	Cold		Average		Warm	
	3355		1715		776	

Accessories

Speed control switches

Name	Photo	Description
CDP-2/10		Multi-speed switch