

Sileo DC 100 IR

High-performance low noise extract fans with DC motors

- Casing material: Plastic
- Backdraft protection: Backdraft damper
- Motion sensor
- Timer: Turn off timer

	Unit of measurement	Sileo DC 100 IR	
Speed	-	1	2
Maximum supply voltage	V	240	
Minimum supply voltage	V	220	
Power supply frequency	Hz	50/60	
Maximum airflow	m³/h	70	101
Weight	kg	0.55	
Ambient air temperature min	°C	1	
Ambient air temperature max	°C	40	
Ingress protection rating	-	IP45	
Impeller material	-	Plastic	

Dimensions

a	b	c	Ø d	e
136	158	81	100	26

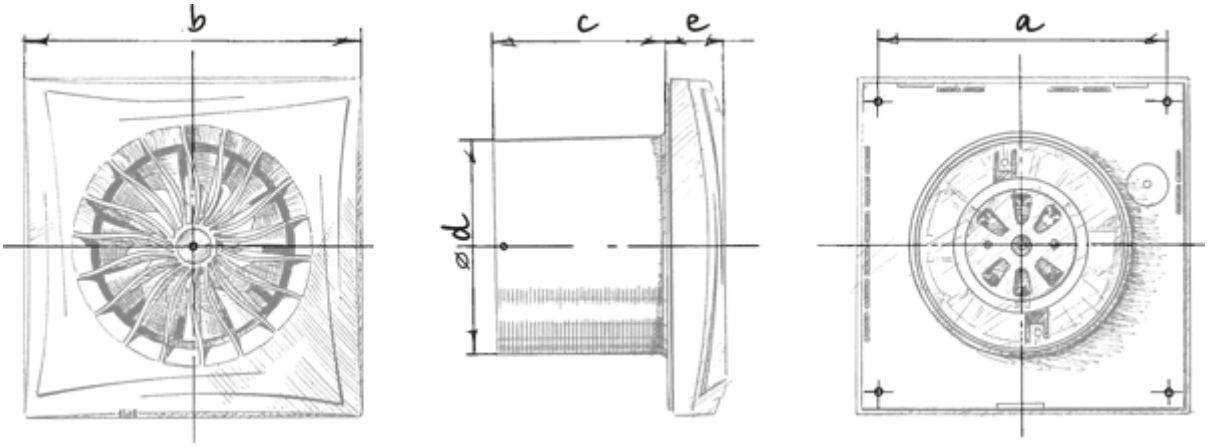
b
c
e
a
ød

Ecodesign

Trademark	Blauberg					
Model	Sileo DC 100 IR					
Specific energy consumption (SEC) (kWh/(m²/a))	Cold		Average		Warm	
	-55	A+	-27.9	B	-12.4	E
Type of ventilation unit	Unidirectional					
Type of drive installed	2-speed					
Type of heat recovery system	None					
Maximum flow rate (m³/h)	101					
Electric power input (W)	3.5					
Reference flow rate (m³/s)	0.019					
Specific power input (SPI) (W/(m³/h))	0.021					
Control typology	Local demand control					
Maximum external leakage rates (%)	2.7					
Sound power level (dB(A))	47					
Declared typology	RVU UVU					
The annual electricity consumption (AEC) (kWh/a)	Cold		Average		Warm	
	16		16		16	
The annual heating saved (AHS) (kWh/a)	Cold		Average		Warm	
	5536		2830		1280	