

Sileo 150 TR

High-performance low noise extract fans

- Backdraft protection: Backdraft damper
- Timer: Turn on timer, Turn off timer

	Unit of measurement	Sileo 150 TR	
Speed	-	1	2
Minimum supply voltage	V	220	
Maximum supply voltage	V	240	
Power supply frequency	Hz	50/60	
Maximum airflow	m³/h	220	315
Weight	kg	1.33	
Ambient air temperature max	°C	40	
Ambient air temperature min	°C	1	
Ingress protection rating	-	IP45	
Impeller material	-	Plastic	

Dimensions

a	b	c	Ø d	e
190	214	98	148	32

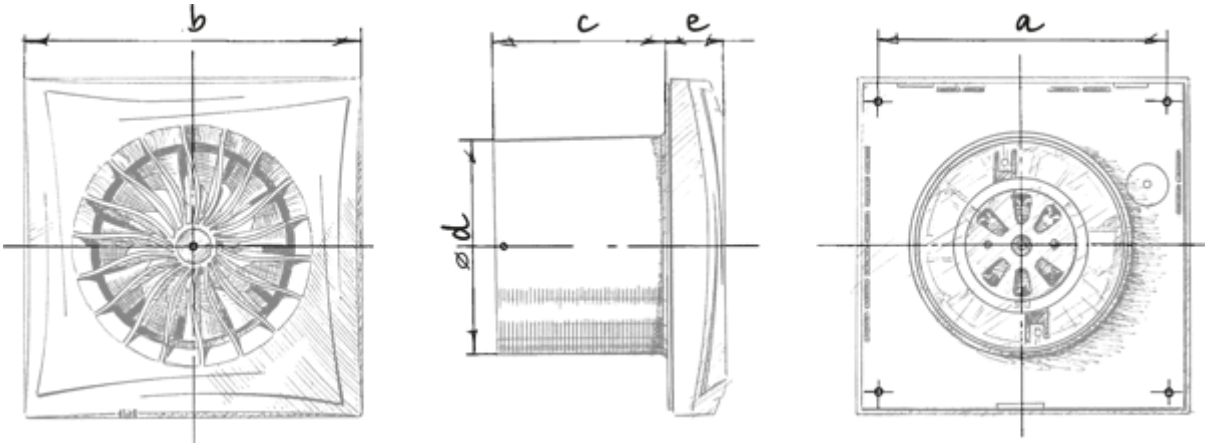
b
c
e
a
ød

Ecodesign

Trademark	Blauberg					
Model	Sileo 150 TR					
Specific energy consumption (SEC) (kWh/(m²/a))	Cold		Average		Warm	
	-31.1	B	-14.7	E	-5.3	F
Type of ventilation unit	Unidirectional					
Type of drive installed	2-speed					
Type of heat recovery system	None					
Maximum flow rate (m³/h)	315					
Electric power input (W)	19					
Reference flow rate (m³/s)	0.061					
Specific power input (SPI) (W/(m³/h))	0.077					
Control typology	Manual control					
Maximum external leakage rates (%)	2.7					
Sound power level (dB(A))	48					
Declared typology	RVU UVU					
The annual electricity consumption (AEC) (kWh/a)	Cold		Average		Warm	
	97		97		97	
The annual heating saved (AHS) (kWh/a)	Cold		Average		Warm	
	3355		1715		776	