

# Sileo 125 T

High-performance low noise extract fans

- Casing material: Plastic
- Backdraft protection: Backdraft damper
- Timer: Turn off timer

| | Unit of measurement | Sileo 125 T |
|---|---|---|
| Phases | - | 1 |
| Maximum supply voltage | V | 240 |
| Minimum supply voltage | V | 220 |
| Power supply frequency | Hz | 50 |
| Maximum airflow | m³/h | 185 |
| Weight | kg | 0.78 |
| Ambient air temperature max | °C | 40 |
| Ambient air temperature min | °C | 1 |
| Ingress protection rating | - | IP45 |
| Impeller material | - | Plastic |

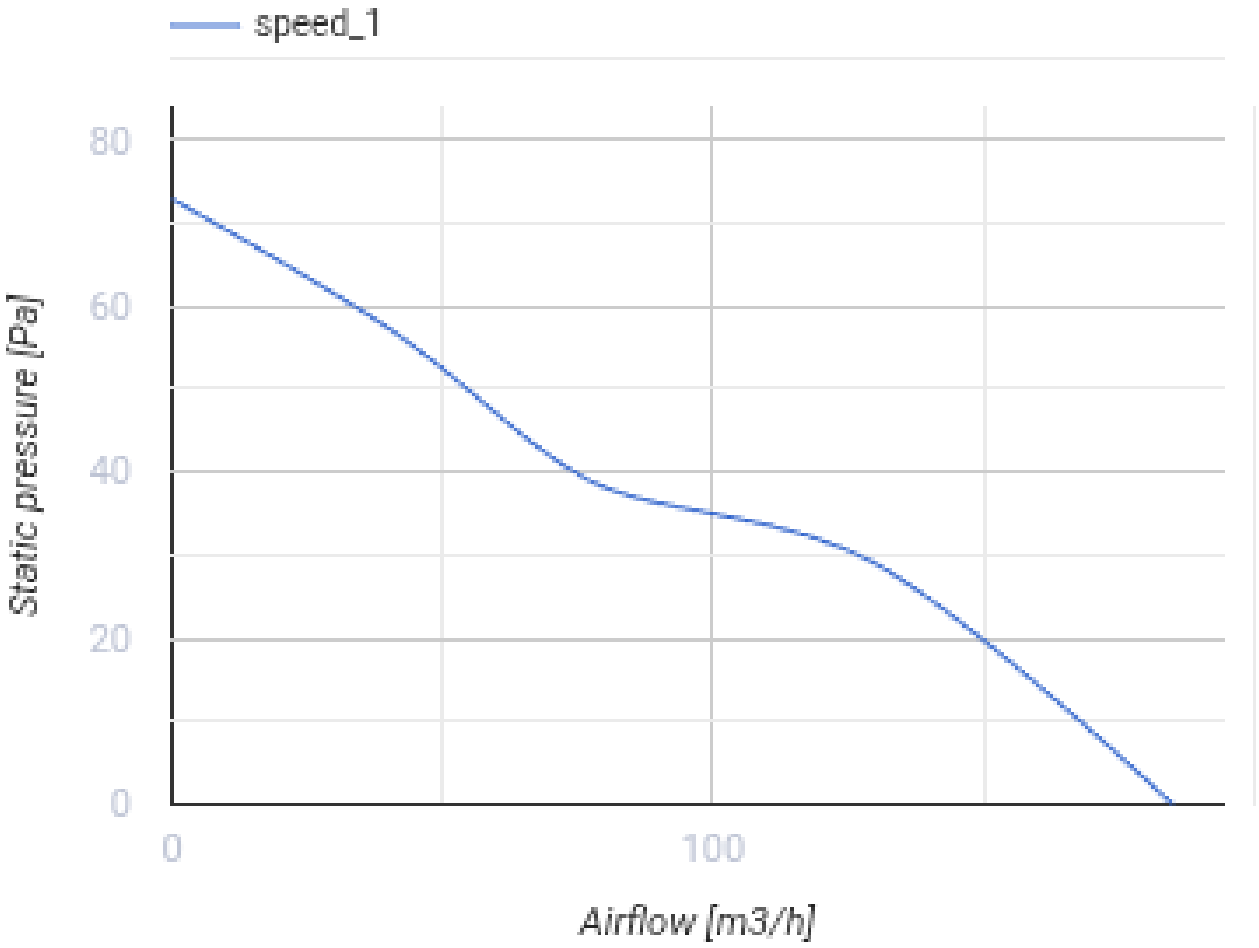


## Dimensions

| a | b | c | Ø d | e |
|---|---|---|---|---|
| 158 | 182 | 91 | 124 | 27 |

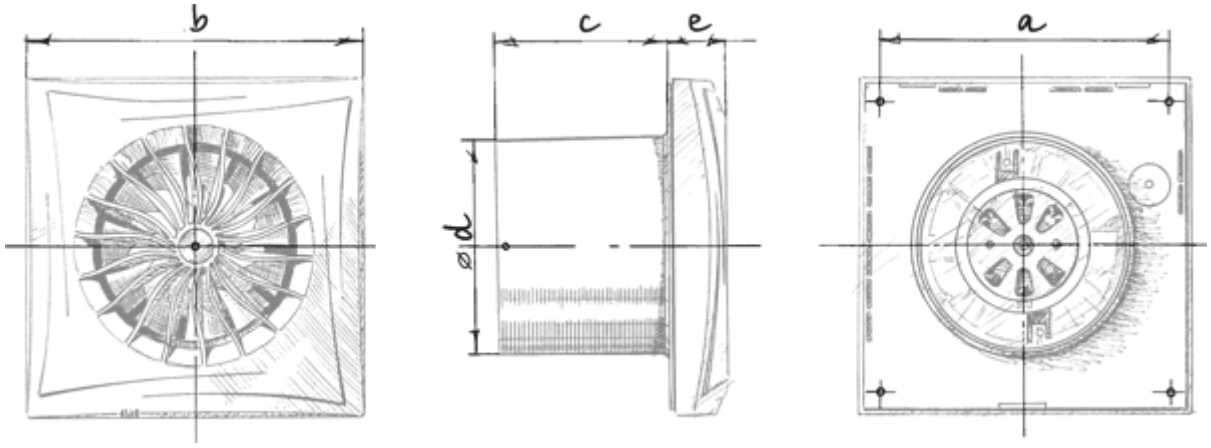

## Ecodesign

| | | | | | | |
|---|---|---|---|---|---|---|
| Trademark | Blauberg | | | | | |
| Model | Sileo 125 T | | | | | |
| Specific energy consumption (SEC) (kWh/(m²/a)) | Cold | | Average | | Warm | |
| | -30.7 | B | -14.3 | E | -4.9 | F |
| Type of ventilation unit | Unidirectional | | | | | |
| Type of drive installed | Single speed | | | | | |
| Type of heat recovery system | None | | | | | |
| Maximum flow rate (m³/h) | 185 | | | | | |
| Electric power input (W) | 17 | | | | | |
| Reference flow rate (m³/s) | 0.036 | | | | | |
| Specific power input (SPI) (W/(m³/h)) | 0.092 | | | | | |
| Control typology | Manual control | | | | | |
| Maximum external leakage rates (%) | 2.7 | | | | | |
| Sound power level (dB(A)) | 52 | | | | | |
| Declared typology | RVU UVU | | | | | |
| The annual electricity consumption (AEC) (kWh/a) | Cold | | Average | | Warm | |
| | 115 | | 115 | | 115 | |
| The annual heating saved (AHS) (kWh/a) | Cold | | Average | | Warm | |
| | 3355 | | 1715 | | 776 | |

## Accessories

### Speed controllers

| Name | Photo | Description |
|---|---|---|
| CDT E1.8 |  | Thyristor speed controller |