

Sileo 100 H

High-performance low noise extract fans

- Casing material: Plastic
- Backdraft protection: Backdraft damper
- Humidity sensor
- Timer: Turn off timer

	Unit of measurement	Sileo 100 H
Phases	-	1
Maximum supply voltage	V	240
Minimum supply voltage	V	220
Power supply frequency	Hz	50
Maximum airflow	m³/h	97
Weight	kg	0.55
Ambient air temperature min	°C	1
Ambient air temperature max	°C	40
Ingress protection rating	-	IP45
Impeller material	-	Plastic

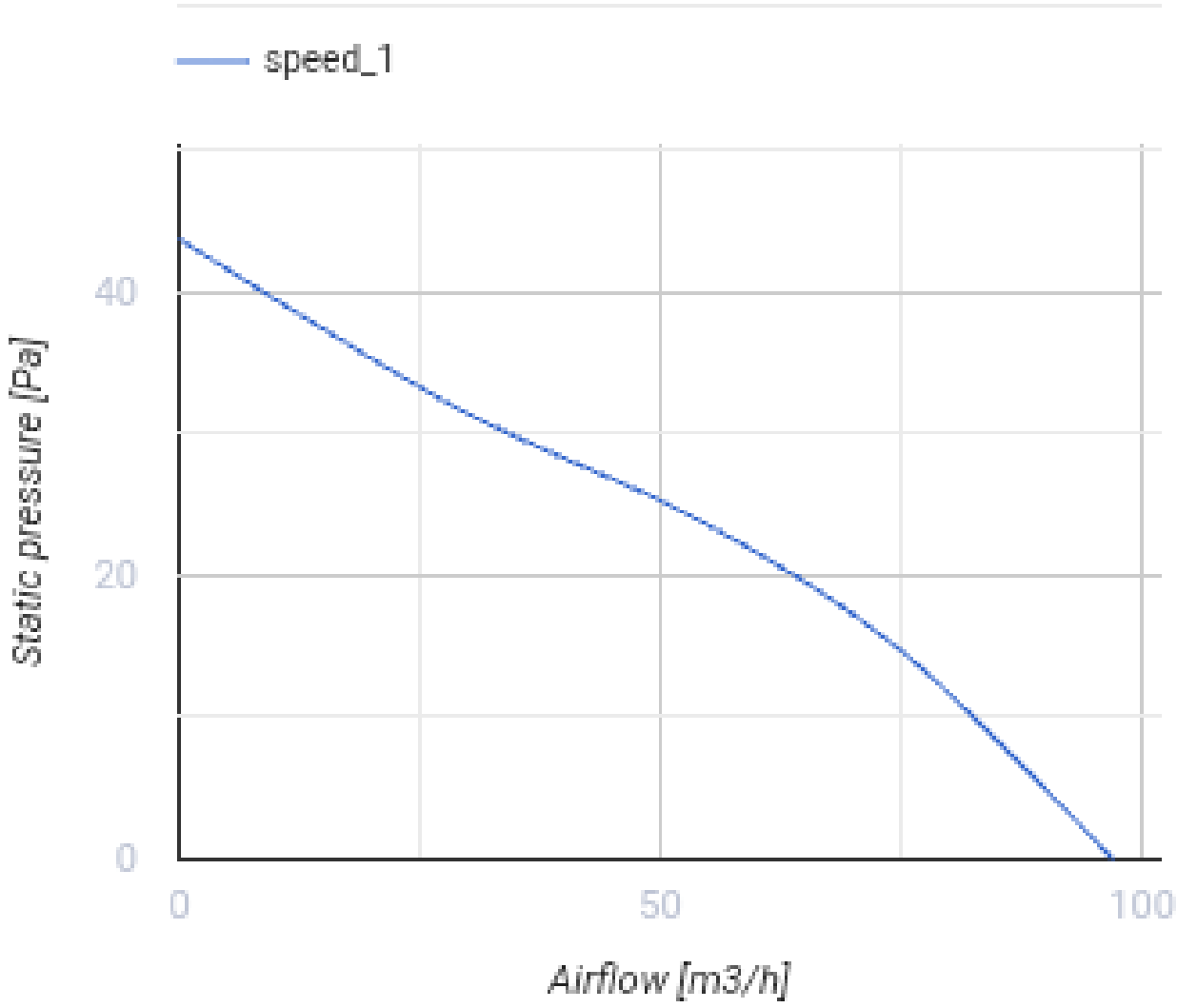

Dimensions

a	b	c	Ø d	e
136	158	81	100	26

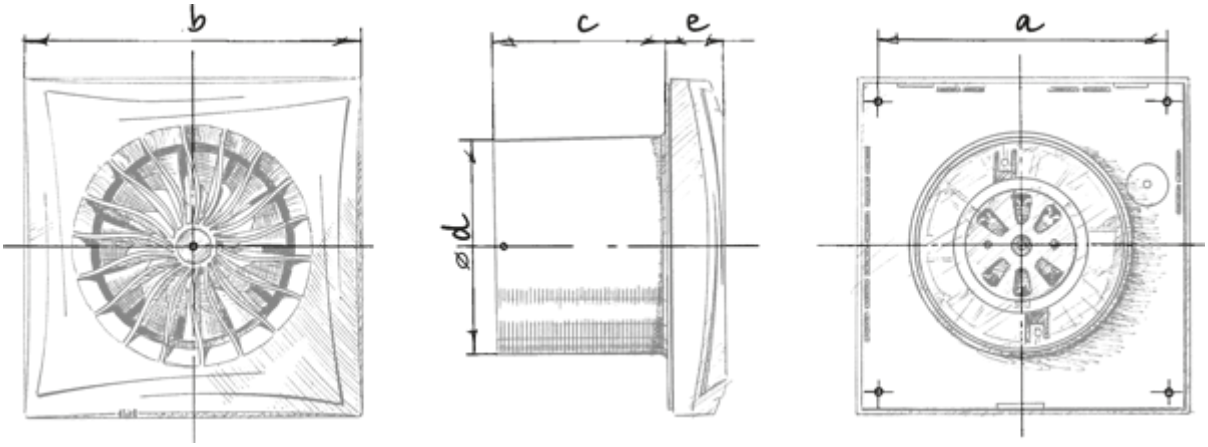
b
c
e
a
ød

Ecodesign

Trademark	Blauberg					
Model	Sileo 100 H					
Specific energy consumption (SEC) (kWh/(m²/a))	Cold		Average		Warm	
	-31.1	B	-14.7	E	-5.3	F
Type of ventilation unit	Unidirectional					
Type of drive installed	Single speed					
Type of heat recovery system	None					
Maximum flow rate (m³/h)	97					
Electric power input (W)	7.5					
Reference flow rate (m³/s)	0.019					
Specific power input (SPI) (W/(m³/h))	0.077					
Control typology	Manual control					
Maximum external leakage rates (%)	2.7					
Declared typology	RVU UVU					
Sound power level (dB(A))	45					
The annual electricity consumption (AEC) (kWh/a)	Cold		Average		Warm	
	97		97		97	
The annual heating saved (AHS) (kWh/a)	Cold		Average		Warm	
	3355		1715		776	

Accessories

Speed controllers

Name	Photo	Description
CDT E1.8		Thyristor speed controller