

SE1 Vento Eco

Sensor control panel

• Casing material: Plastic

	Unit of measurement	SE1 Vento Eco
Minimum supply voltage	V	12
Maximum supply voltage	V	32
Weight	kg	0.06
Ambient air temperature min	°C	10
Ambient air temperature max	°C	45
Ingress protection rating	-	IP20

Dimensions

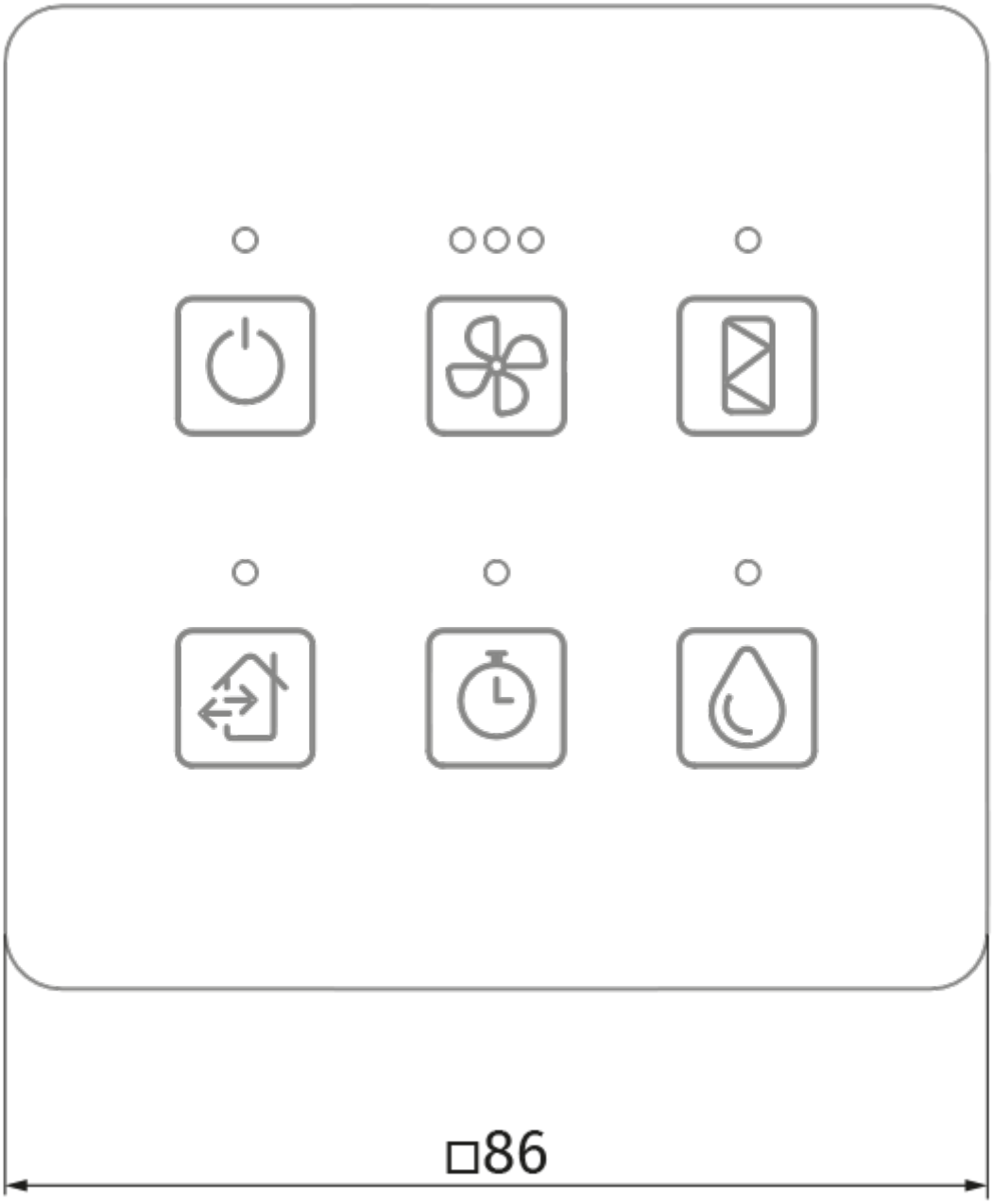
□86

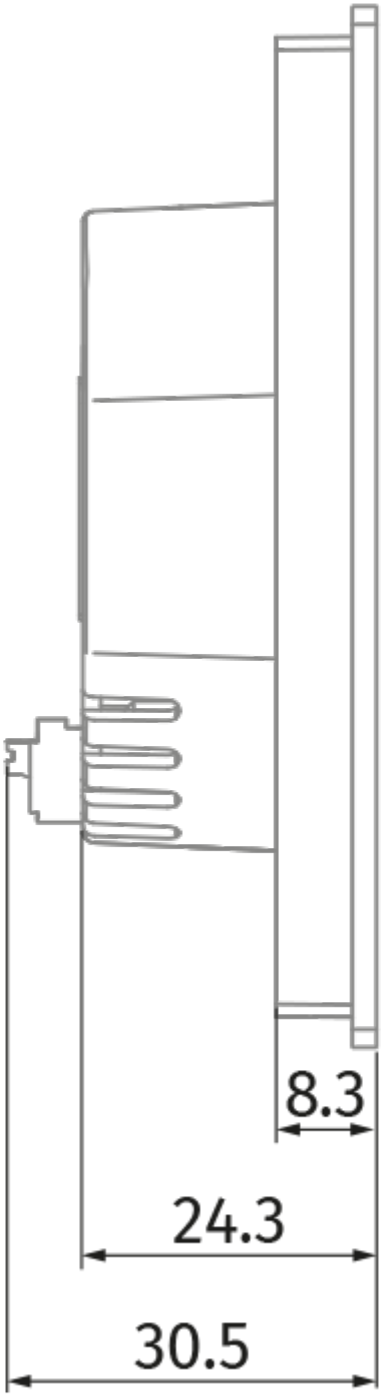
8.3
24.3
30.5

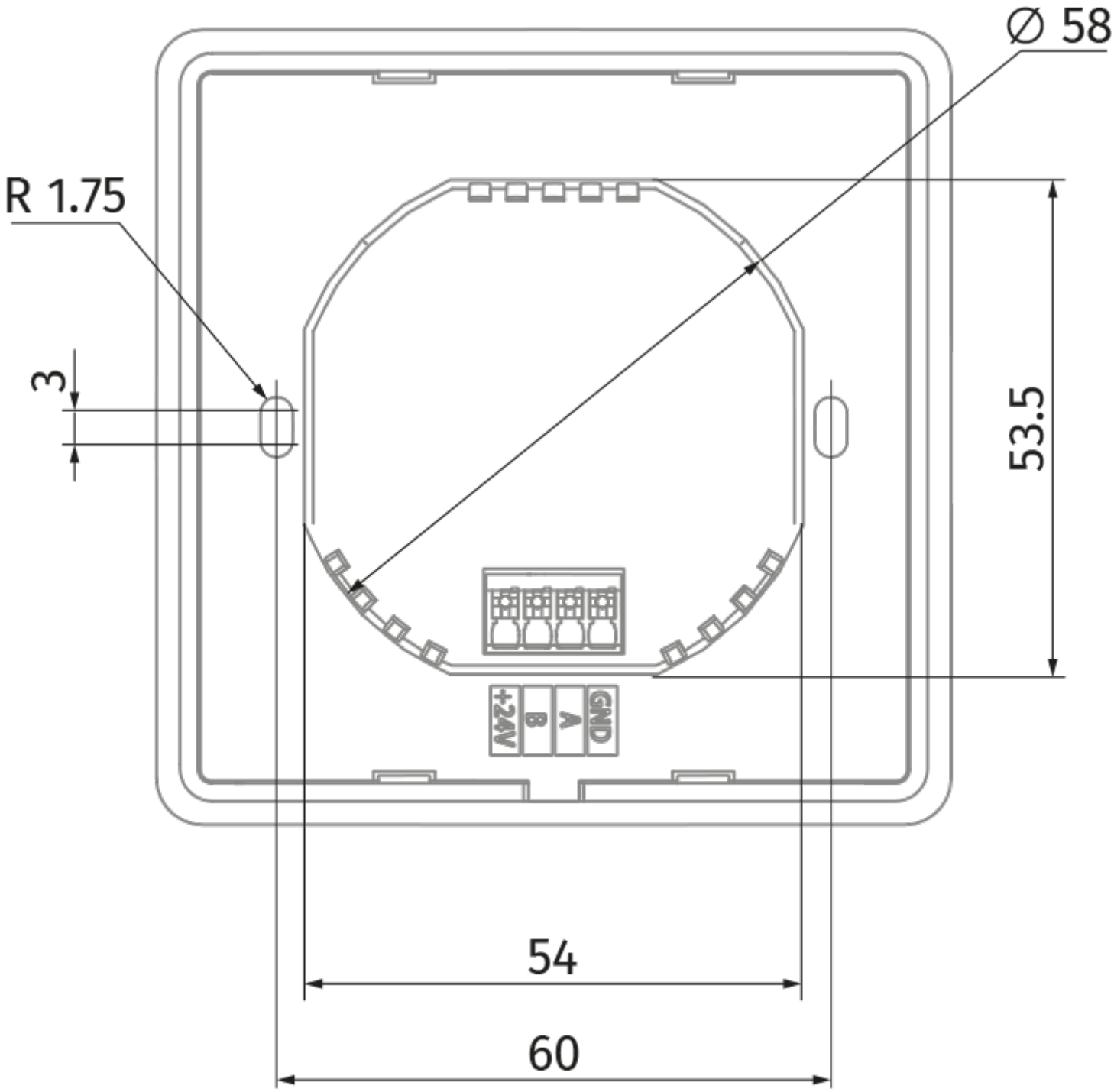
∅ 58
R 1.75
3
53.5
+24V
B
A
GND
54
60