

SE Vento Expert W

Control panel

• Casing material: Plastic

	Unit of measurement	SE Vento Expert W
Minimum supply voltage	V	110
Maximum supply voltage	V	230
Power supply frequency	Hz	50/60
Weight	kg	0.19
Ambient air temperature min	°C	10
Ambient air temperature max	°C	45
Ingress protection rating	-	IP40

Dimensions

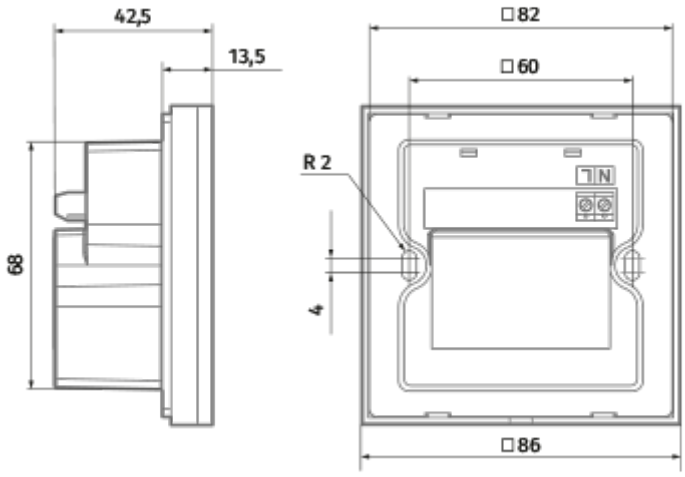
42,5
13,5
68
□82
□60
R 2
L N
4
□86