

Reneo SE 381-E R S21 CF

Heat and energy recovery air handling units

- Heat exchanger type: Counter flow
- Heat exchanger material: Enthalpy
- Sound-insulated casing
- Enthalpy heat exchanger
- Bypass: Auto
- Reheater: Optional
- Preheater: Built-in
- BMS protocol: ModBus
- Control: Smartphone
- Casing material: EPP
- Humidity sensor: Optional
- CO2 sensor: Optional
- PM2.5 sensor: Optional

	Unit of measurement	Reneo SE 381-E R S21 CF
Phases	-	1
Minimum supply voltage	V	230
Maximum supply voltage	V	230
Power supply frequency	Hz	50/60
Maximum airflow	m³/h	390
Heat recovery efficiency, max	%	83
Heat exchanger type	-	Counter flow
Heat exchanger material	-	Enthalpy
Weight	kg	26
Transported air temperature (max)	°C	40
Transported air temperature (min)	°C	-25
Ambient air temperature min	°C	1
Ambient air temperature max	°C	40
Ingress protection rating	-	IP22
Ingress protection rating of the drive	-	IP44
Ambient air humidity max	%	60

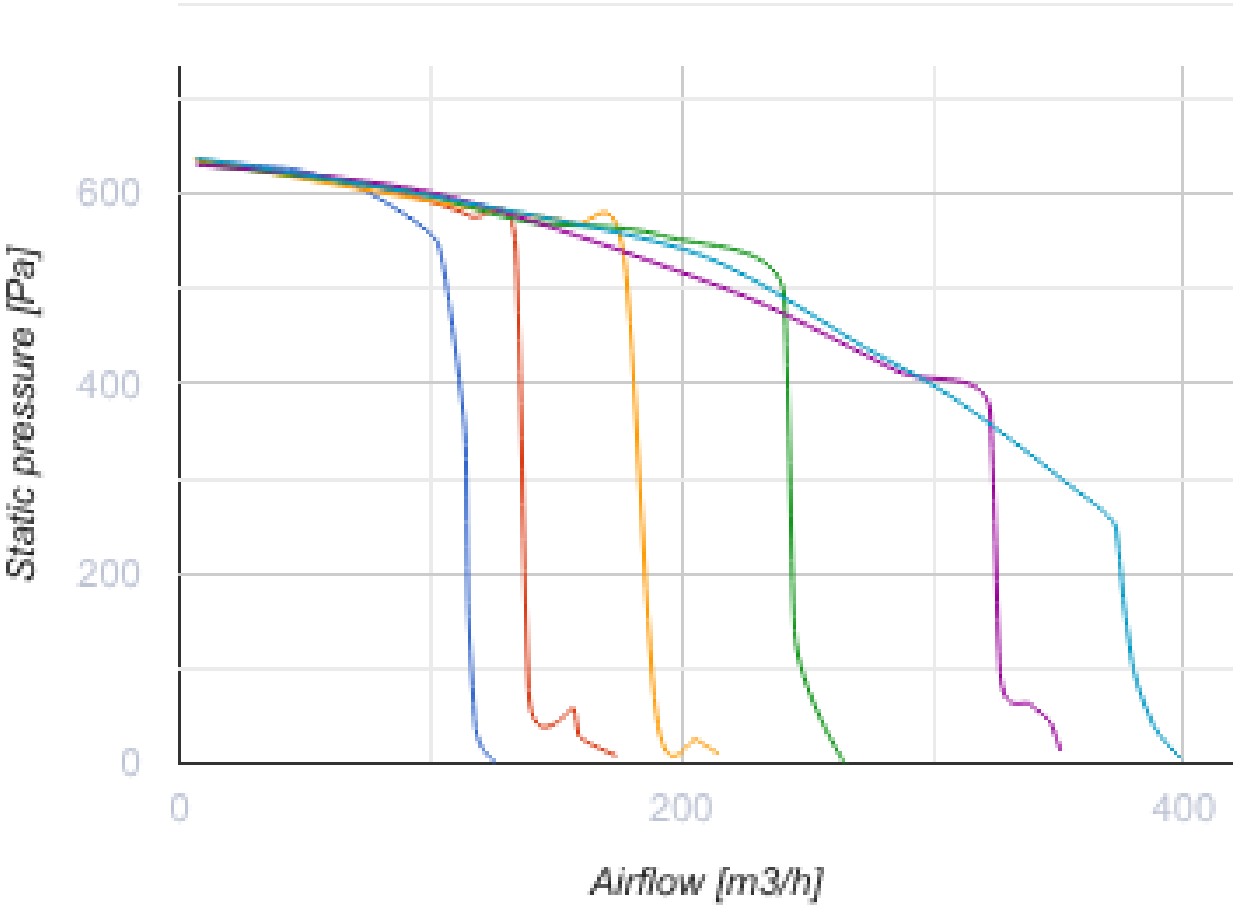
Static pressure [Pa]
600
400
200
0
0
200
400
Airflow [m3/h]

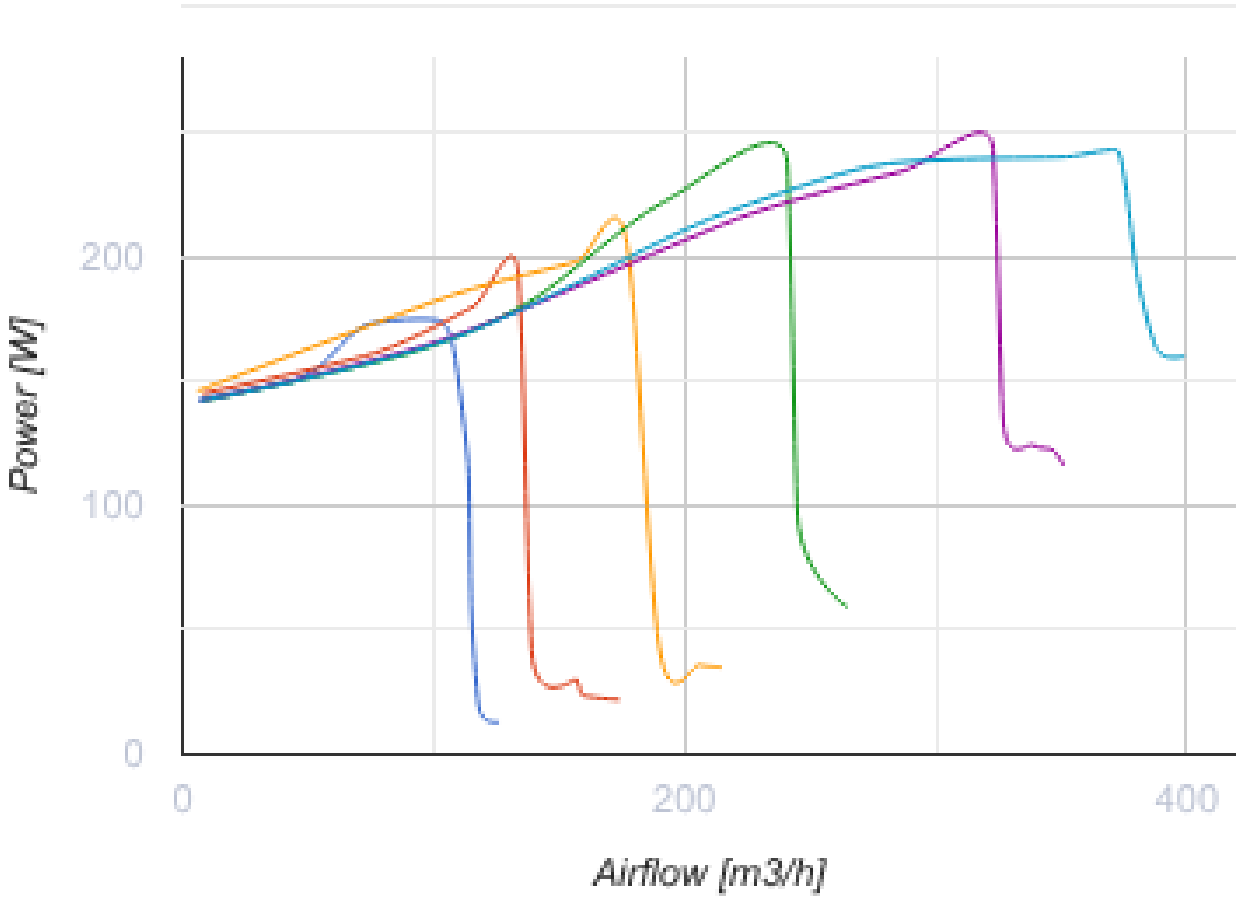

Dimensions

Ø D	H	H1	L	L1	W	W1
160	880	939	616	230	770	355

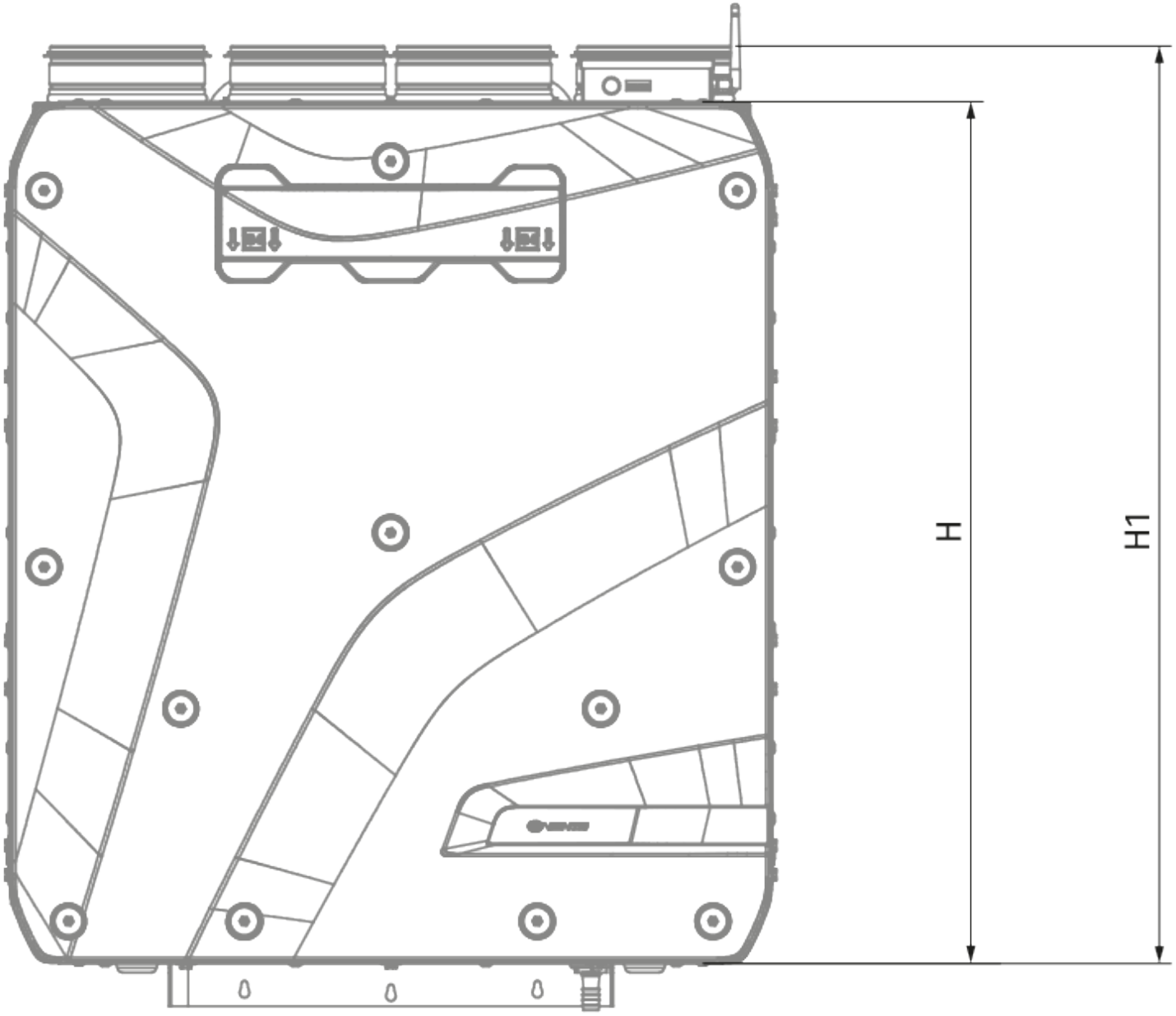
H
H1

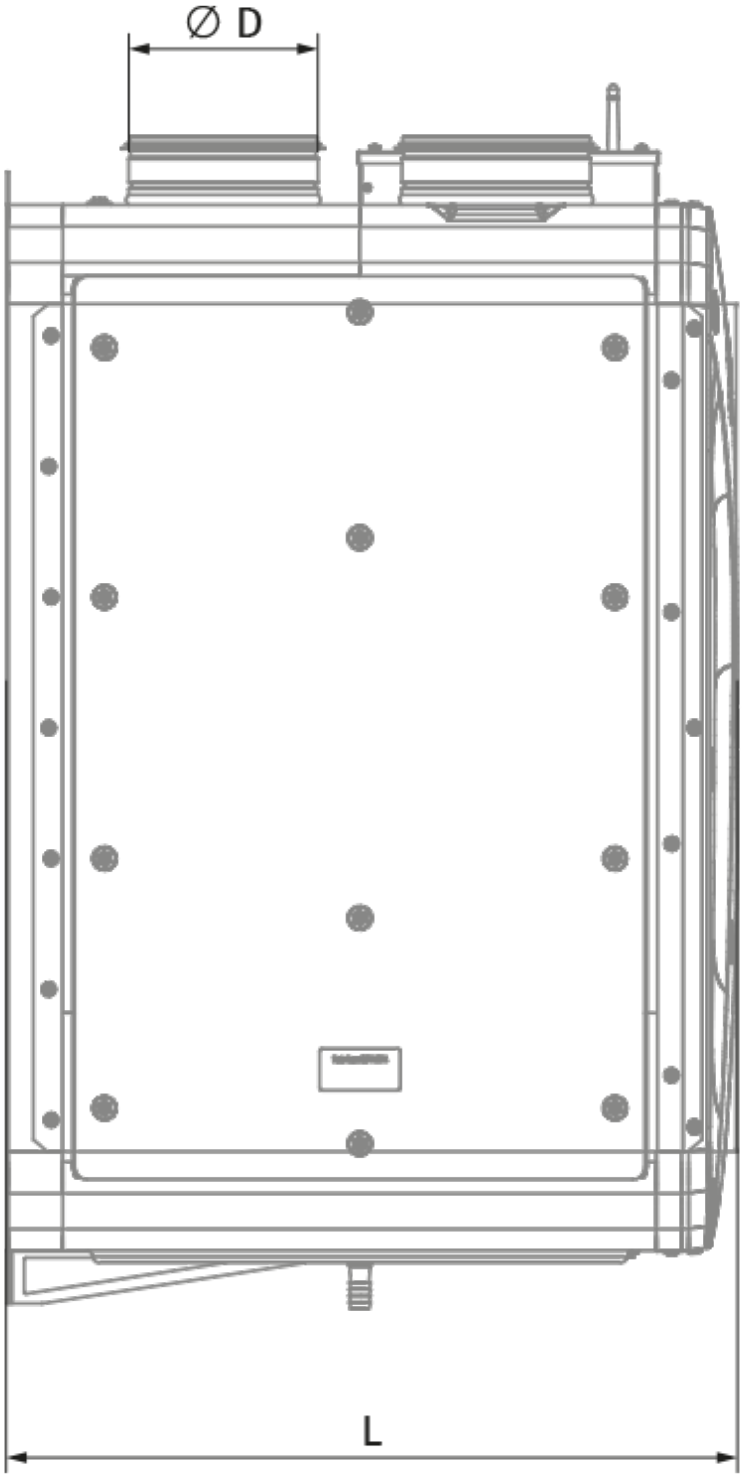
∅ D
L

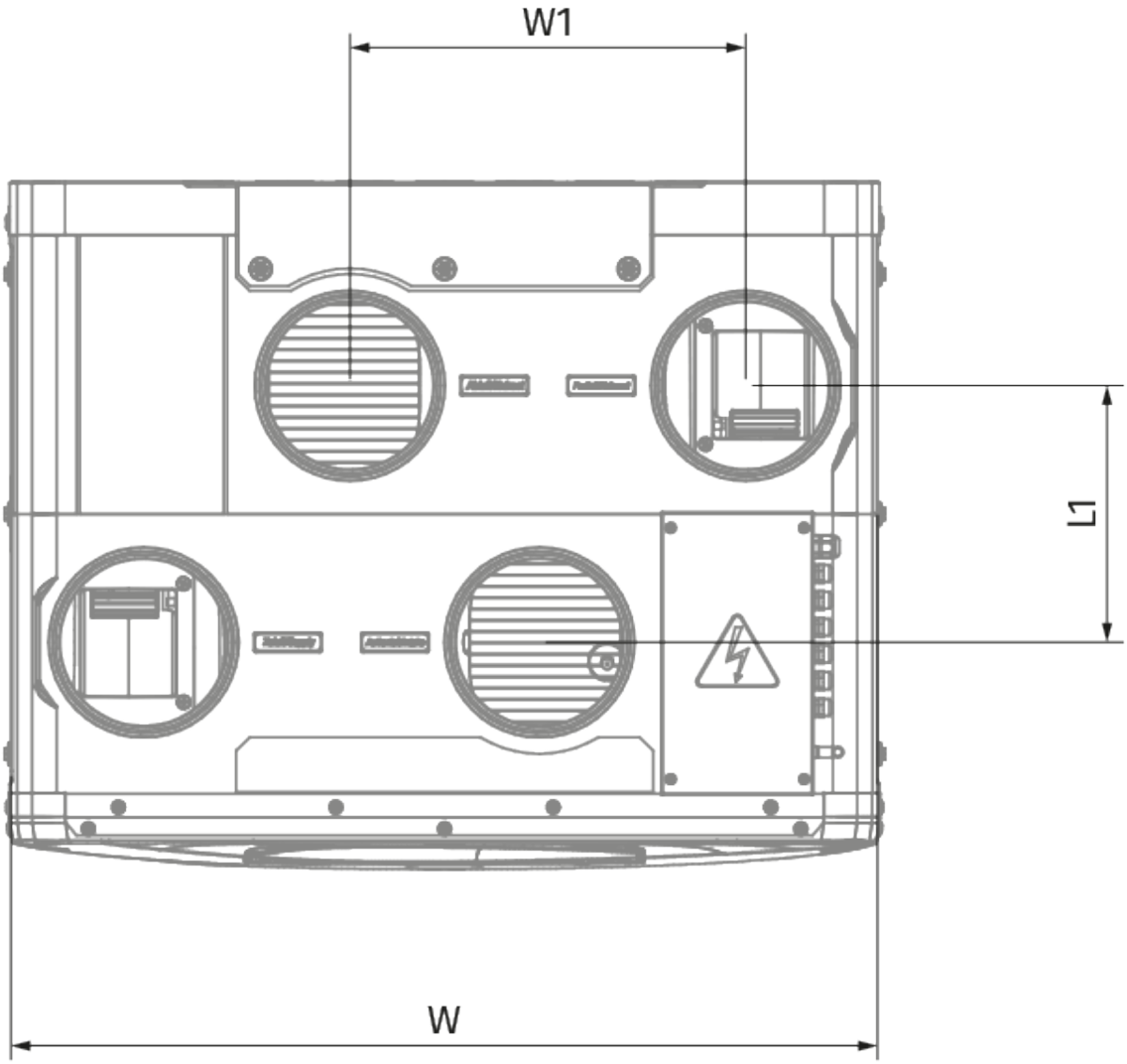

Accessories

For round ducts

Name	Photo	Description

SD 160/600		Silencers for round ducts
SD 160/900		Silencers for round ducts
SD 160/1200		Silencers for round ducts

For round ducts

Name	Photo	Description
VKA 160		Air dampers for round ducts

Electrical heaters

Name	Photo	Description
ENH 160-0.8-1 S21 V.2		Duct heater for supply air reheating
ENH 160-1.2-1 S21 V.2		Duct heater for supply air reheating
ENH 160-1.7-1 S21 V.2		Duct heater for supply air reheating
ENH 160-2.0-1 S21 V.2		Duct heater for supply air reheating

Control Panels

Name	Photo	Description
S25		LCD control panel
S22		Control panels
S22 Wi-Fi		Control panels

CO2 sensors

Name	Photo	Description
CD-1		CO2 sensors
CD-2		CO2 sensors
CD-3		Carbon dioxide sensor

Humidity sensors

Name	Photo	Description
FS2		Humidity sensor

Other accessories

Name	Photo	Description
FP 496x150x60 ePM1 60 % (F7)		F7 panel filter
FP 496x150x60 Coarse 90 % (G4)		G4 panel filter
EP-Reneo S 351		Decorative panel

Electric actuators

Name	Photo	Description
Belimo TF230		Electric actuators