

Reneo S 400-E L S14

Heat and energy recovery air handling units

- Heat exchanger type: Counter flow
- Heat exchanger material: Enthalpy
- Sound-insulated casing
- Enthalpy heat exchanger
- Bypass: Manual
- Control: Wired control panel
- Casing material: EPP
- Humidity sensor: Optional
- CO2 sensor: Optional

	Unit of measurement	Reneo S 400-E L S14
Phases	-	1
Minimum supply voltage	V	230
Maximum supply voltage	V	230
Power supply frequency	Hz	50/60
Maximum airflow	m³/h	445
Heat recovery efficiency, max	%	83
Heat exchanger type	-	Counter flow
Heat exchanger material	-	Enthalpy
Weight	kg	26
Transported air temperature (max)	°C	40
Transported air temperature (min)	°C	-25
Ambient air temperature max	°C	40
Ambient air temperature min	°C	1
Ingress protection rating	-	IP22
Ingress protection rating of the drive	-	IP44
Ambient air humidity max	%	60

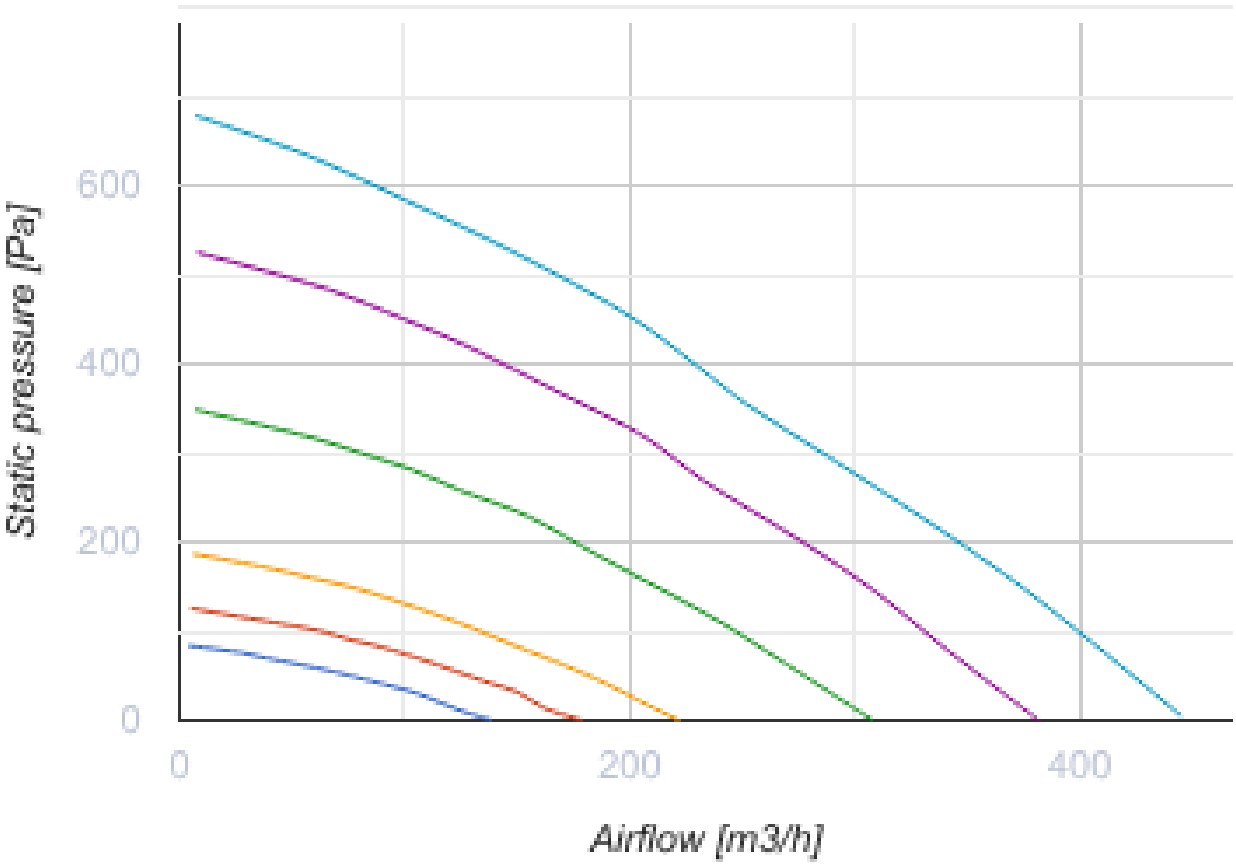
Static pressure [Pa]
600
400
200
0
0
200
400
Airflow [m3/h]

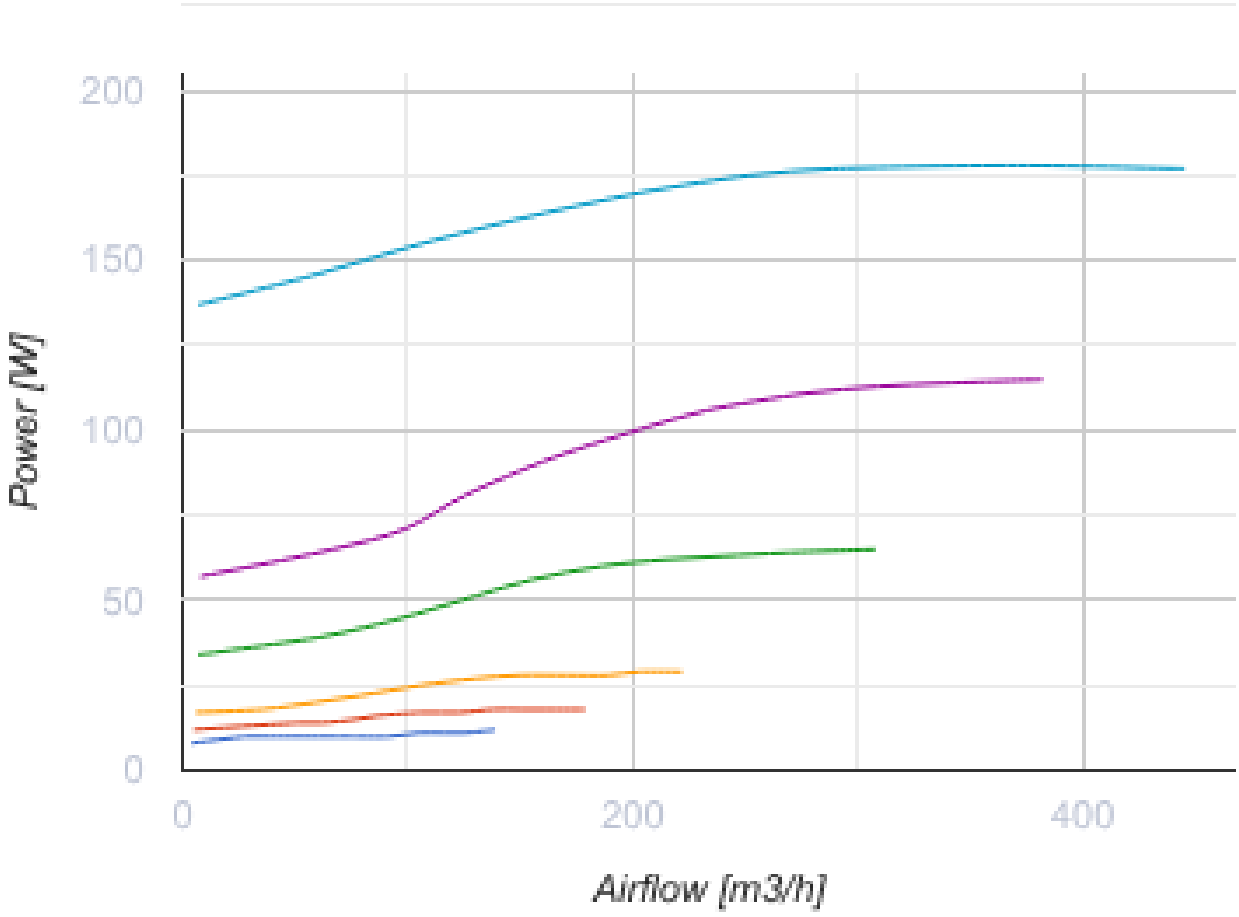

Dimensions

Ø D	H	H1	L	L1	W	W1
160	880	939	616	230	770	355

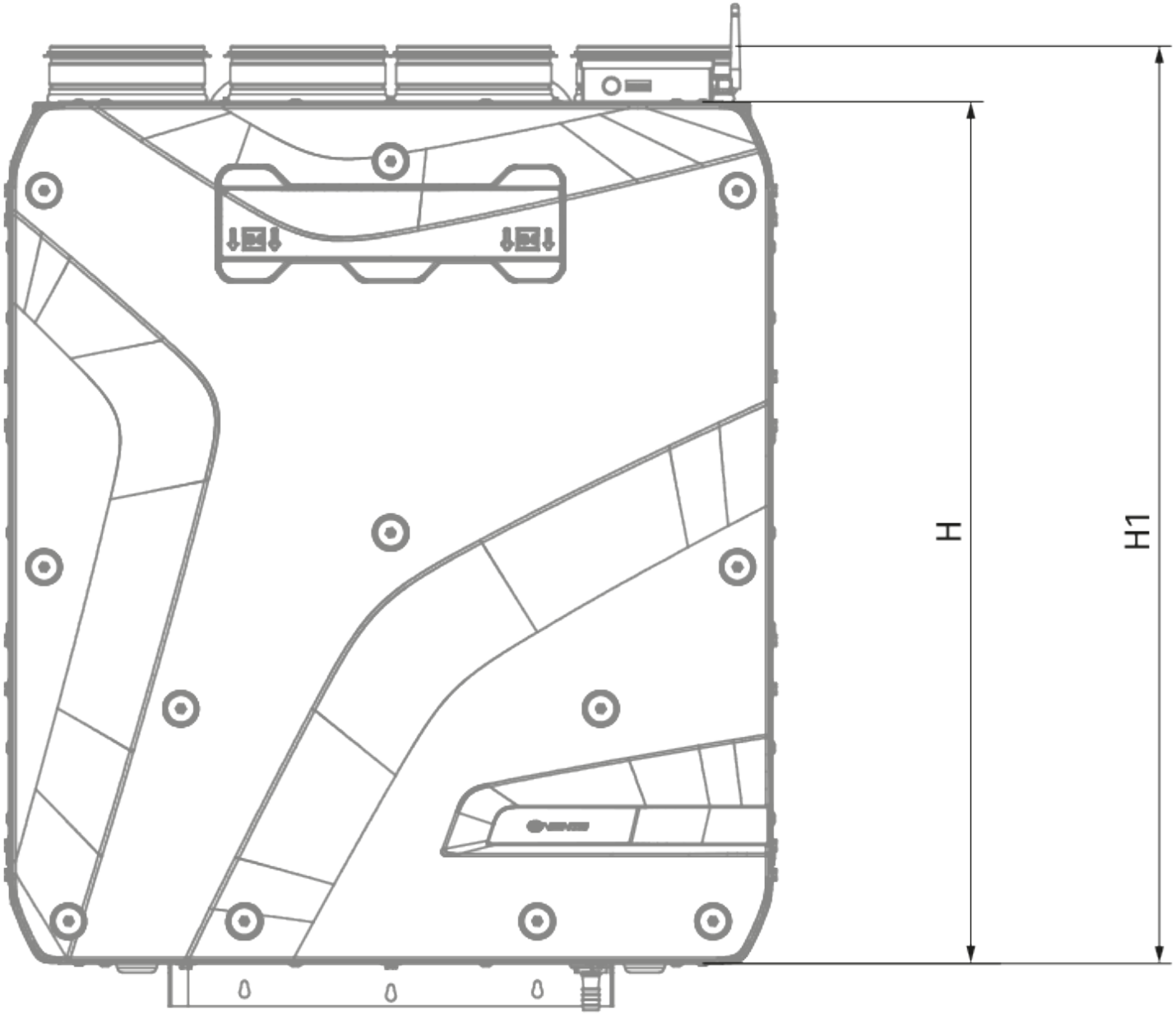
H
H1

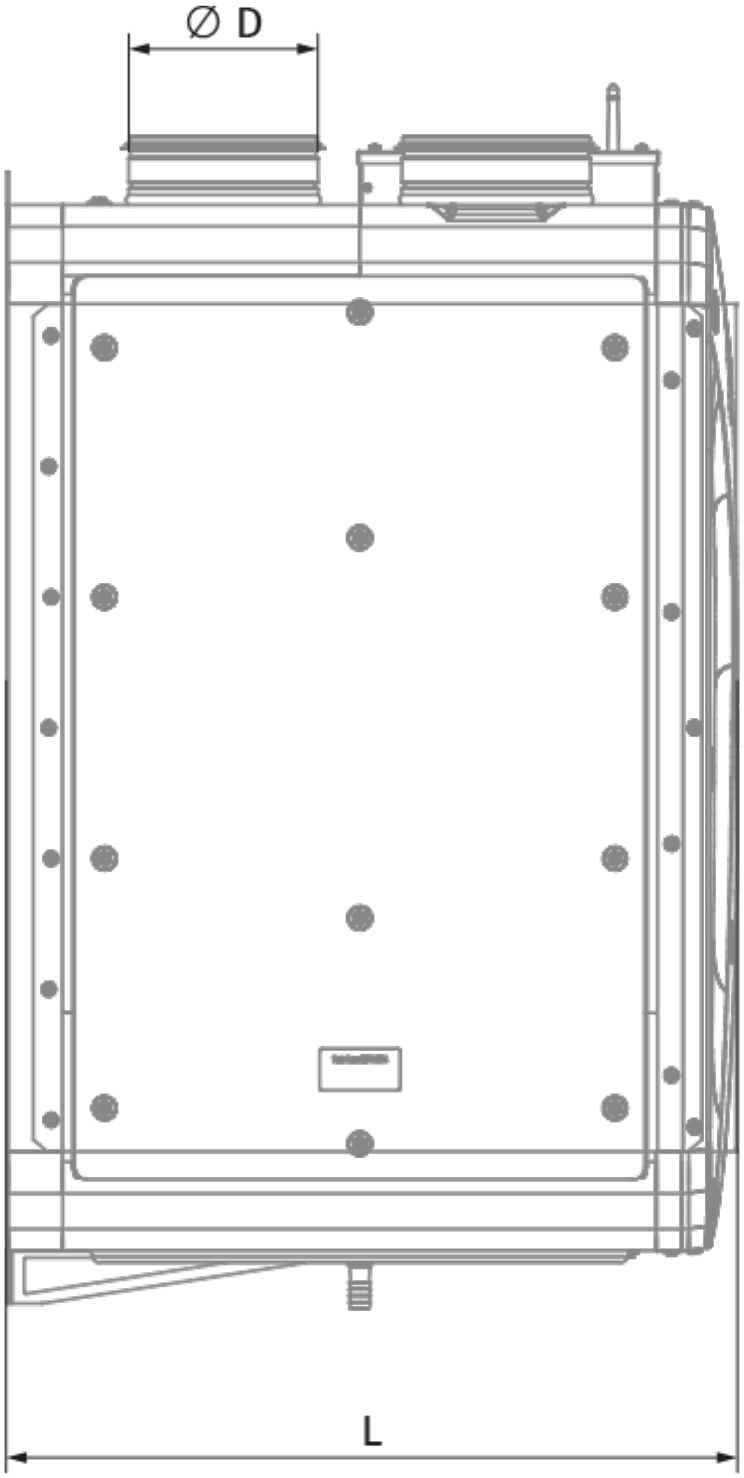
∅ D
L

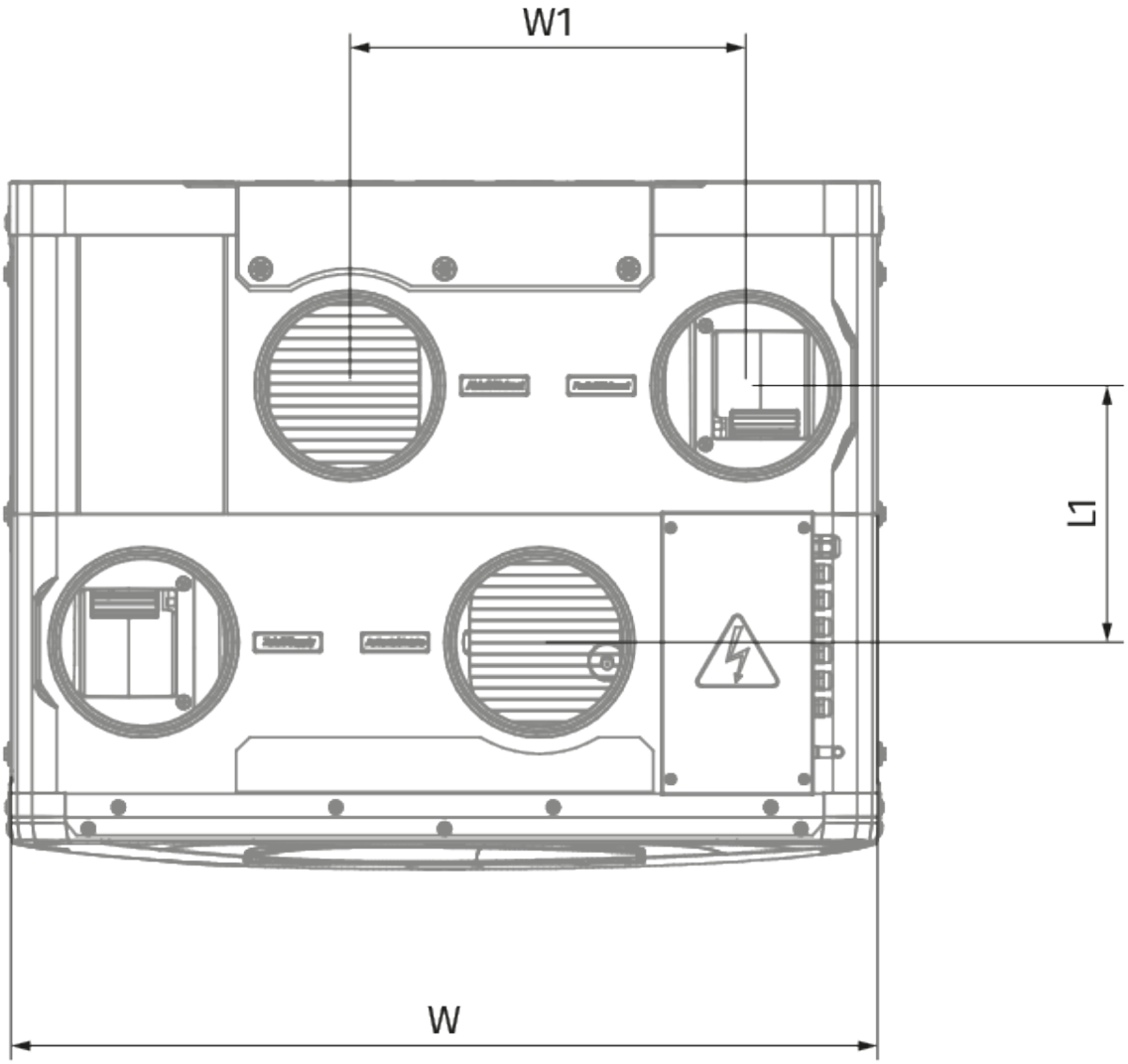
W1
L1
W

Ecodesign

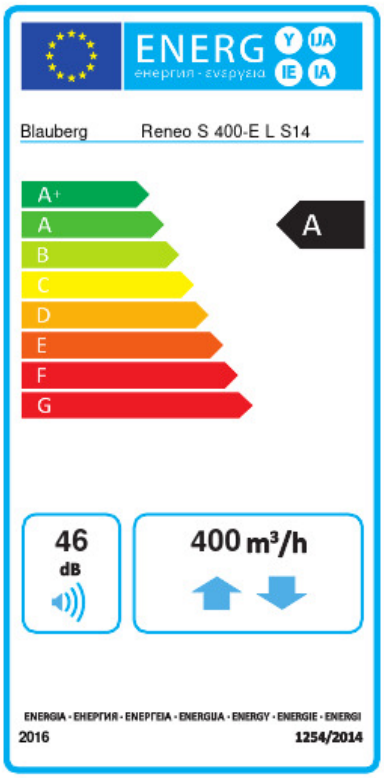

Trademark	Blauberg					
Model	Reneo S 400-E L S14					
Specific energy consumption (SEC) (kWh/(m²/a))	Cold		Average		Warm	
	-79.3	A+	-41.5	A	-17.3	E
Type of ventilation unit	Bidirectional					
Type of drive installed	Variable speed					
Type of heat recovery system	Recuperative					
Thermal efficiency of heat recovery (%)	81					
Maximum flow rate (m³/h)	400					
Electric power input (W)	178					
Reference flow rate (m³/s)	0.076					
Reference pressure difference (Pa)	50					
Specific power input (SPI) (W/(m³/h))	0.233					
Control typology	Local demand control					
Maximum internal leakage rates (%)	2.7					
Maximum external leakage rates (%)	2.7					
Sound power level (dB(A))	46					
Declared typology	RVU BVU					
The annual electricity consumption (AEC) (kWh/a)	Cold		Average		Warm	
	7.1		1.7		1.2	
The annual heating saved (AHS) (kWh/a)	Cold		Average		Warm	
	88		45		20	

Accessories

For round ducts

Name	Photo	Description
SD 160/600		Silencers for round ducts
SD 160/900		Silencers for round ducts

SD 160/1200		Silencers for round ducts

For round ducts

Name	Photo	Description
VKA 160		Air dampers for round ducts

CO2 sensors

Name	Photo	Description
CD-1		CO2 sensors
CD-2		CO2 sensors

Humidity sensors

Name	Photo	Description
FS2		Humidity sensor

Other accessories

Name	Photo	Description
FP 496x150x60 ePM1 60 % (F7)		F7 panel filter
FP 496x150x60 Coarse 90 % (G4)		G4 panel filter

Electric actuators

Name	Photo	Description

Belimo TF230		Electric actuators