

Reneo-Fit D 230 R S21 CF

Heat and energy recovery air handling units

- Heat exchanger type: Counter flow
- Heat exchanger material: Polystyrene
- Sound-insulated casing
- Bypass: Auto
- Reheater: Optional
- Preheater: Optional
- BMS protocol: ModBus
- Control: Smartphone
- Casing material: EPP
- Humidity sensor: Optional
- CO2 sensor: Optional
- PM2.5 sensor: Optional

	Unit of measurement	Reneo-Fit D 230 R S21 CF
Phases	-	1
Minimum supply voltage	V	230
Maximum supply voltage	V	230
Power supply frequency	Hz	50/60
Maximum airflow	m³/h	240
Heat recovery efficiency, max	%	89
Heat exchanger type	-	Counter flow
Heat exchanger material	-	Polystyrene
Weight	kg	18
Transported air temperature (max)	°C	40
Transported air temperature (min)	°C	-25
Ambient air temperature min	°C	1
Ambient air temperature max	°C	40
Ingress protection rating	-	IP22
Ambient air humidity max	%	60
Ingress protection rating of the drive	-	IP44

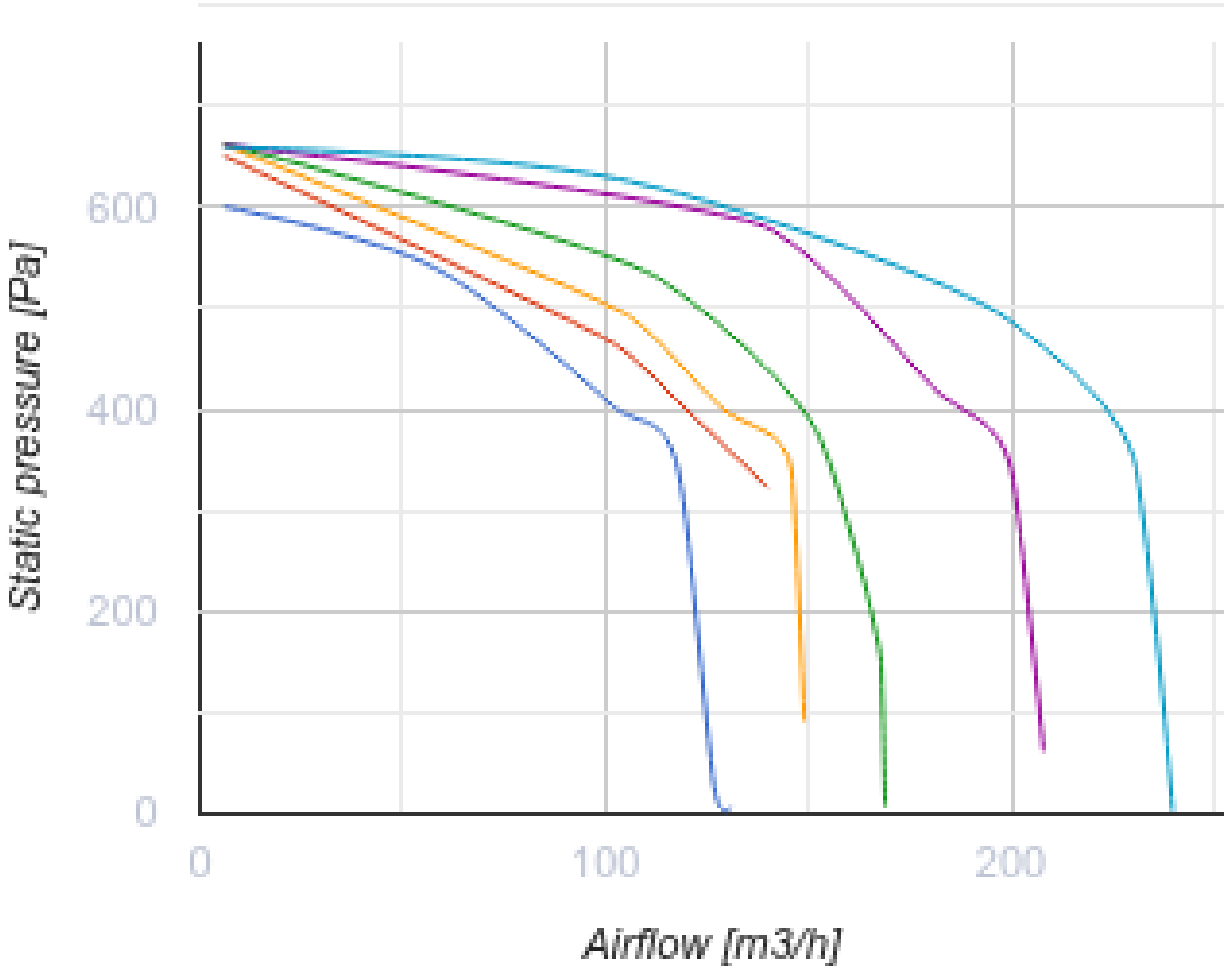
Static pressure [Pa]
600
400
200
0
0
100
200
Airflow [m3/h]

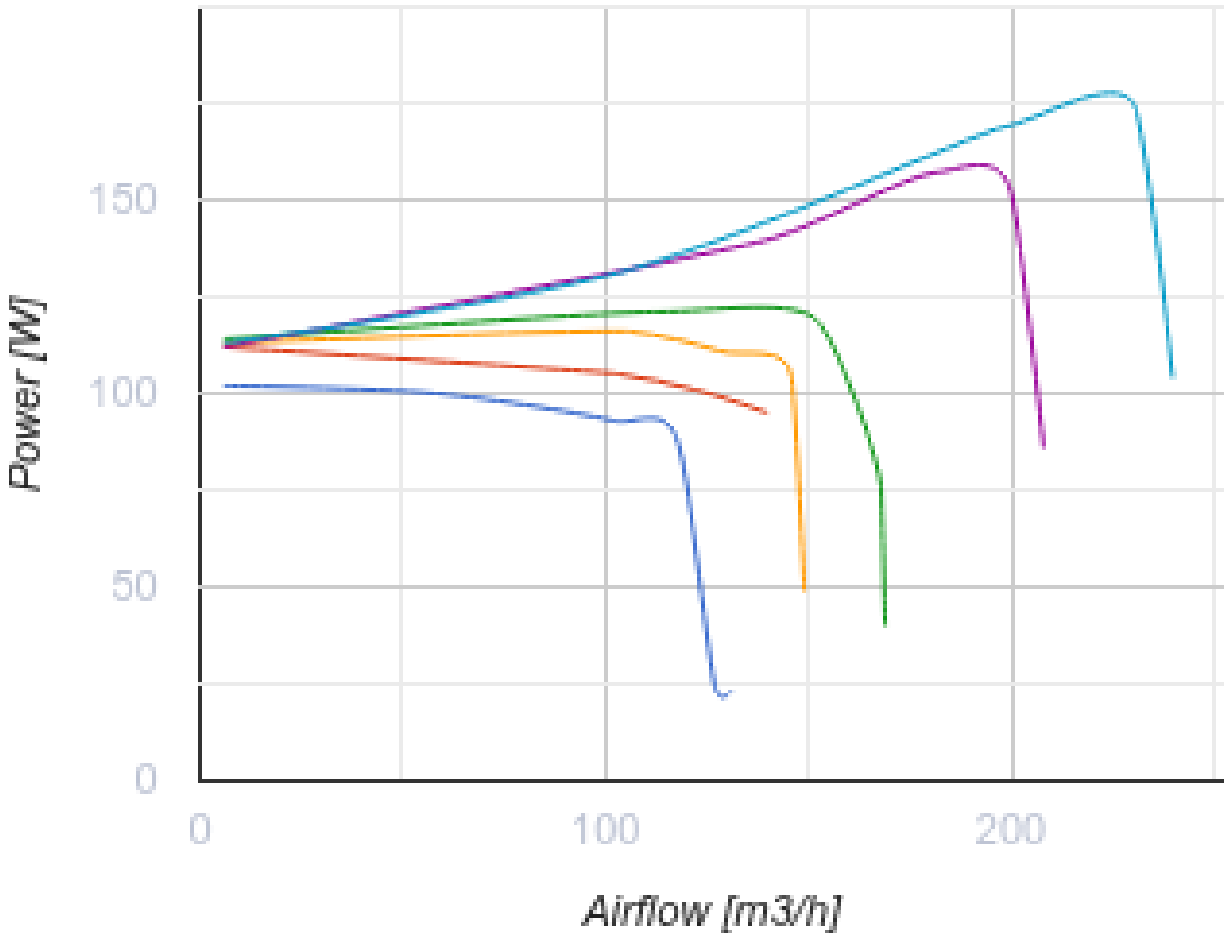

Dimensions

Ø D	Ø D1	H	L	L1	W	W1	W2	W3
160	125	242	1160	685	683	642	610	521

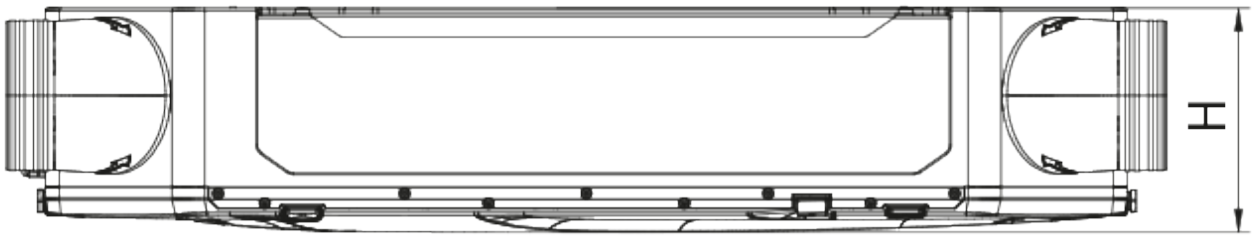
H

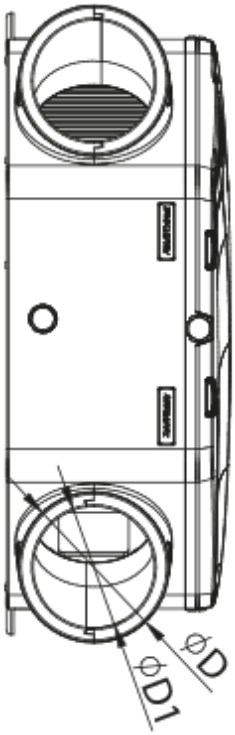
ØD
ØD1

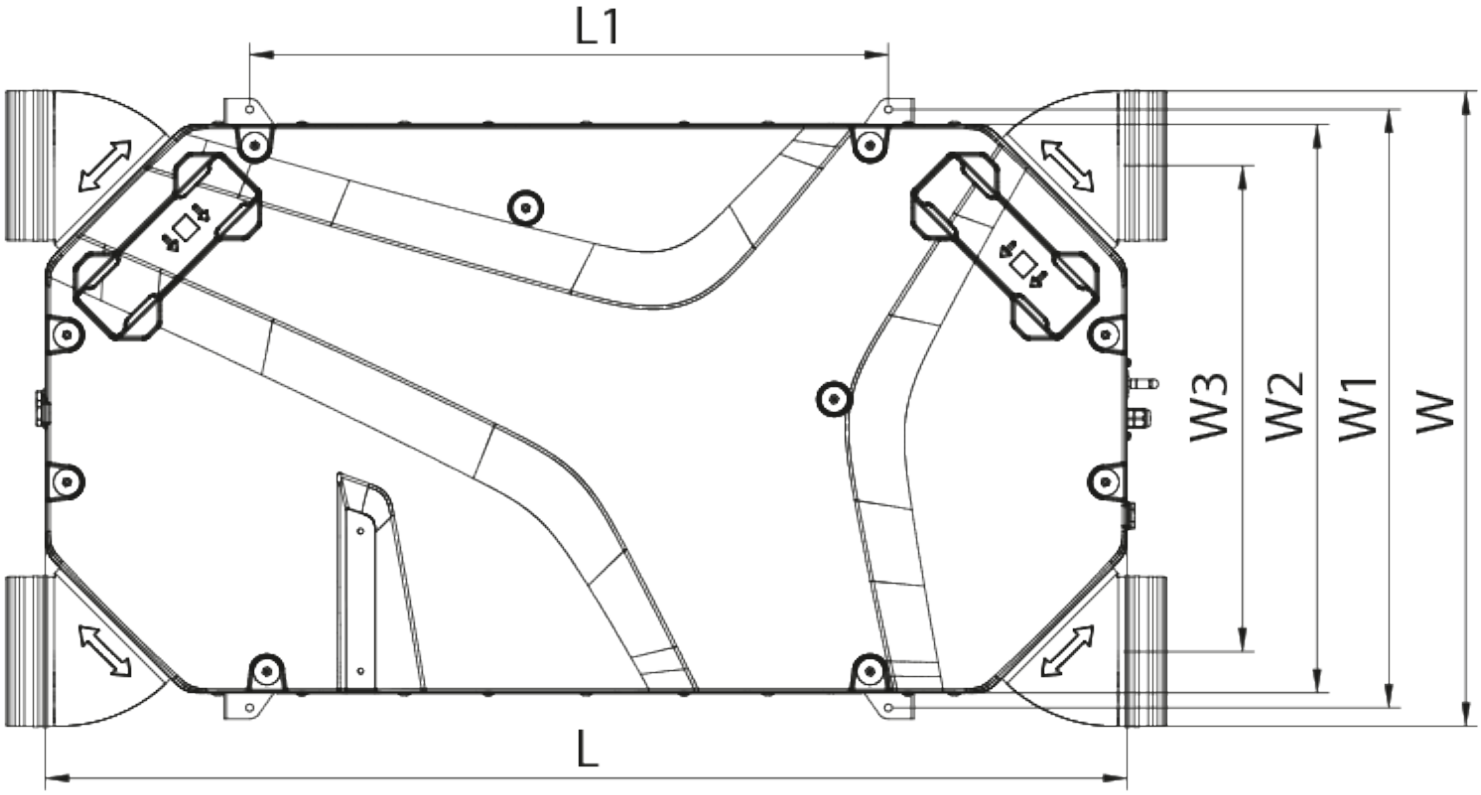
L1
W3
W2
W1
W
L

Ecodesign

Trademark	Blauberg					
Model	Reneo-Fit D 230 R S21 CF					
Specific energy consumption (SEC) (kWh/(m²/a))	Cold		Average		Warm	
	-80.1	A+	-41.6	A	-16.9	E
Type of ventilation unit	Bidirectional					
Type of drive installed	Variable speed					
Type of heat recovery system	Recuperative					
Thermal efficiency of heat recovery (%)	85					
Maximum flow rate (m³/h)	240					
Electric power input (W)	175					
Reference flow rate (m³/s)	0.046					
Reference pressure difference (Pa)	50					
Specific power input (SPI) (W/(m³/h))	0.291					
Control typology	Local demand control					
Maximum internal leakage rates (%)	2.7					
Maximum external leakage rates (%)	2.7					
Sound power level (dB(A))	55					
The annual electricity consumption (AEC) (kWh/a)	Cold		Average		Warm	
	736		199		154	
The annual heating saved (AHS) (kWh/a)	Cold		Average		Warm	
	8979		4590		2075	

Accessories

Condensation drainage

Name	Photo	Description
SFK 20x32		Hydraulic syphon for condensate drainage

For round ducts

Name	Photo	Description

SD 160/600		Silencers for round ducts
SD 160/900		Silencers for round ducts
SD 160/1200		Silencers for round ducts

For round ducts

Name	Photo	Description
VKA 160		Air dampers for round ducts

Electrical heaters

Name	Photo	Description
EVH 160-0.8-1 S21 V.2		Electric duct preheater for heat exchanger freeze protection
EVH 160-1.2-1 S21 V.2		Electric duct preheater for heat exchanger freeze protection
EVH 160-1.7-1 S21 V.2		Electric duct preheater for heat exchanger freeze protection
EVH 160-2.0-1 S21 V.2		Electric duct preheater for heat exchanger freeze protection
ENH 160-0.8-1 S21 V.2		Duct heater for supply air reheating
ENH 160-1.2-1 S21 V.2		Duct heater for supply air reheating
ENH 160-1.7-1 S21 V.2		Duct heater for supply air reheating
ENH 160-2.0-1 S21 V.2		Duct heater for supply air reheating

Control Panels

Name	Photo	Description
S25		LCD control panel
S22		Control panels
S22 Wi-Fi		Control panels

CO2 sensors

Name	Photo	Description
CD-1		CO2 sensors
CD-2		CO2 sensors
CD-3		Carbon dioxide sensor

Humidity sensors

Name	Photo	Description
FS2		Humidity sensor

Other accessories

Name	Photo	Description
FP 200x165x48 ePM1 60% F7		F7 panel filter
FP 200x165x48 Coarse 90% G4		G4 panel filter

Electric actuators

Name	Photo	Description
Belimo TF230		Electric actuators