

Qubit-E 35/60

High-pressure extract centrifugal Qubit fans for air duct systems of high durability

• Impeller type: Centrifugal impeller with forward curved blades
• Casing material: Plastic
• Backdraft protection: Backdraft damper

	Unit of measurement	Qubit-E 35/60	
Speed	-	1	2
Maximum supply voltage	V	240	
Minimum supply voltage	V	220	
Power supply frequency	Hz	50	
Maximum airflow	m³/h	35	60
Ambient air temperature min	°C	1	
Ambient air temperature max	°C	40	
Ingress protection rating	-	IP45	
Impeller material	-	Plastic	

Dimensions

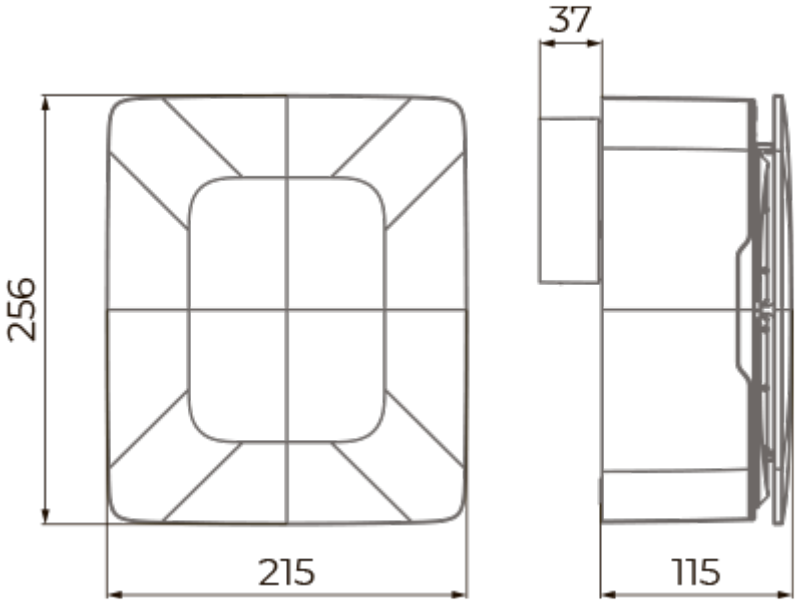
37
256
215
115

Ecodesign

Trademark	Blauberg					
Model	Qubit-E 35/60					
Specific energy consumption (SEC) (kWh/(m²/a))	Cold		Average		Warm	
	69.2	G	85.6	G	95	G
Type of ventilation unit	Unidirectional					
Type of heat recovery system	None					
Maximum flow rate (m³/h)	9					
Electric power input (W)	16.4					
Reference flow rate (m³/s)	0.001					
Reference pressure difference (Pa)	50					
Specific power input (SPI) (W/(m³/h))	3.281					
Control typology	Manual control					
Maximum external leakage rates (%)	2.7					
Sound power level (dB(A))	40					
The annual electricity consumption (AEC) (kWh/a)	Cold		Average		Warm	
	4110		4110		4110	
The annual heating saved (AHS) (kWh/a)	Cold		Average		Warm	
	3355		1715		776	

Accessories

Speed control switches

Name	Photo	Description
CDP-2/5		Multi-speed switch

Fittings

Name	Photo	Description
K 100		Clamp for round flexible ducts

Flexible ducts

Name	Photo	Description
BlauFlex AN 100/3		Flexible air ducts BlauFlex