

Qubit-E 35/60 TP

High-pressure extract centrifugal Qubit fans for air duct systems of high durability

• Impeller type: Centrifugal impeller with forward curved blades
• Casing material: Plastic
• Backdraft protection: Backdraft damper
• Motion sensor
• Timer: Turn on timer, Turn off timer, Internal timer

	Unit of measurement	Qubit-E 35/60 TP	
Speed	-	1	2
Minimum supply voltage	V	220	
Maximum supply voltage	V	240	
Power supply frequency	Hz	50	
Maximum airflow	m³/h	35	60
Ambient air temperature min	°C	1	
Ambient air temperature max	°C	40	
Ingress protection rating	-	IP45	
Impeller material	-	Plastic	

Dimensions

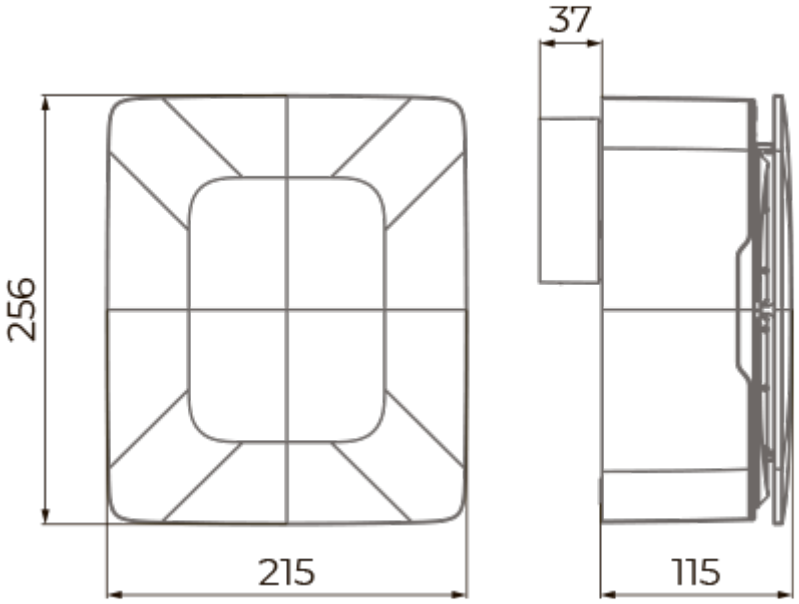

Accessories

Speed control switches

Name	Photo	Description
CDP-2/5		Multi-speed switch

Fittings

Name	Photo	Description
K 100		Clamp for round flexible ducts

Flexible ducts

Name	Photo	Description
BlauFlex AN 100/3		Flexible air ducts BlauFlex