

# Primo EC 160

Mixed-flow inline fans with EC-motors

- Impeller type: Mixed-flow
- Casing material: Polypropylene
- Installation in any position

| | Unit of measurement | Primo EC 160 |
|---|---|---|
| Phases | - | 1 |
| Minimum supply voltage | V | 230 |
| Maximum supply voltage | V | 230 |
| Power supply frequency | Hz | 50/60 |
| Maximum airflow | $m^3/h$ | 700 |
| Weight | kg | 2.9 |
| Transported air temperature (max) | °C | 55 |
| Transported air temperature (min) | °C | -25 |
| Ingress protection rating | - | IPX4 |
| Ingress protection rating of the drive | - | IP44 |
| Impeller material | - | Plastic |

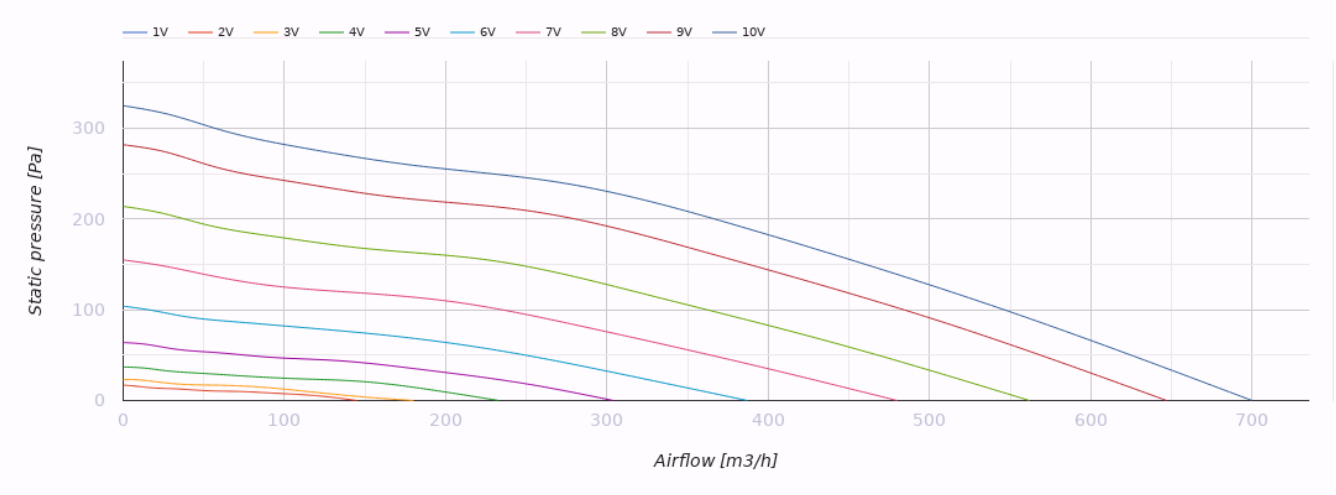


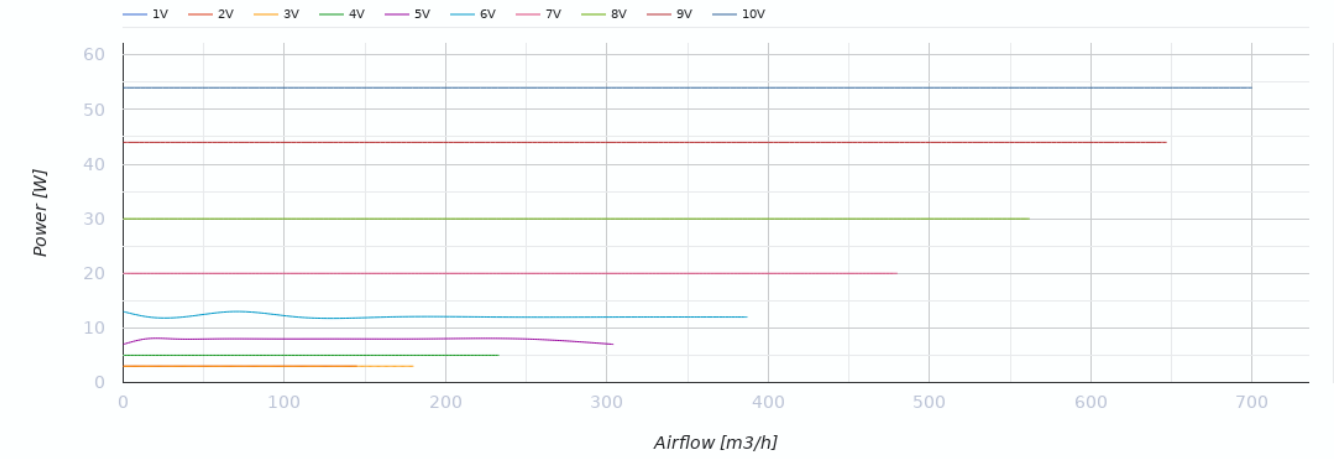


## Dimensions

| A | B | C | Ø D |
|---|---|---|---|
| 267 | 301 | 251 | 160 |

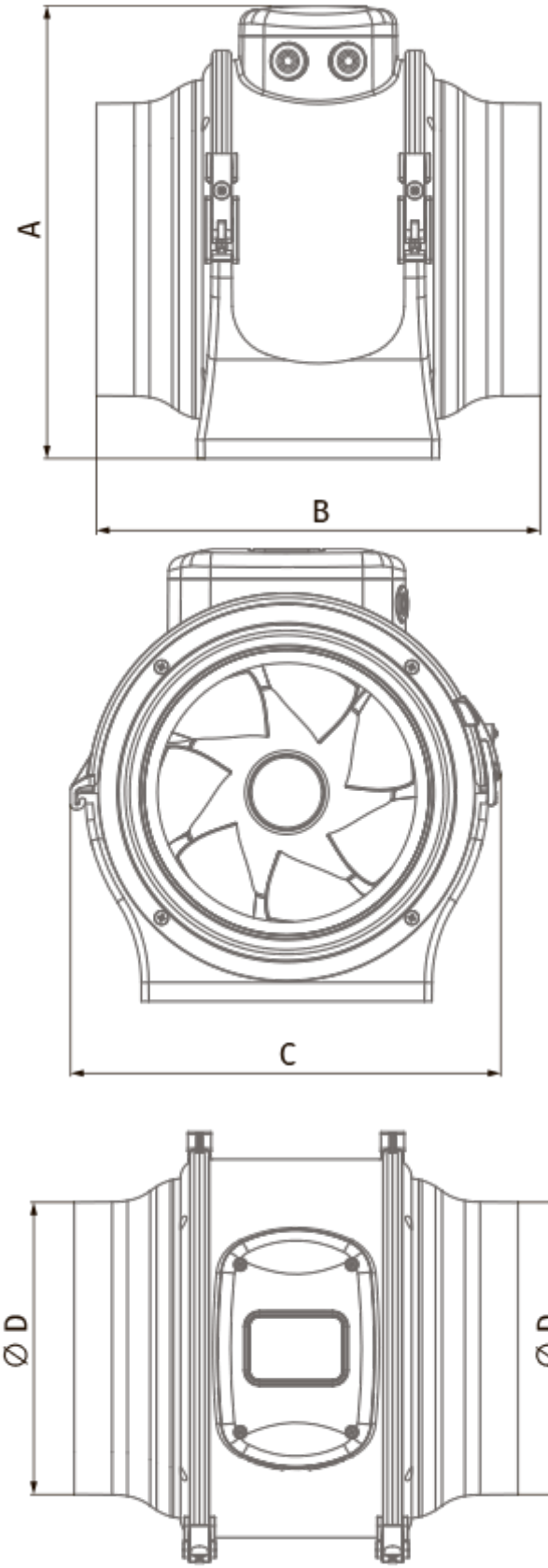
A
B
C
∅ D
∅ D

## Ecodesign

| | |
|---|---|
| Trademark | Blauberg |
| Model | Primo EC 160 |
| Type of ventilation unit | Unidirectional |
| Type of drive installed | Integrated VSD |
| Type of heat recovery system | None |
| Nominal external pressure (Pa) | 188 |
| Maximum external leakage rates (%) | 2.7 |
| Static efficiency (%) | 38.5 |
| Declared typology | NRVU UVU |
| Effective electric power input (kW) | 0.054 |
| Sound power level (dB(A)) | 59 |

## Accessories

### For round ducts

| Name | Photo | Description |
|---|---|---|
| SD 160/600 |  | Silencers for round ducts |
| SD 160/900 |  | Silencers for round ducts |
| SD 160/1200 |  | Silencers for round ducts |

### For round ducts

| Name | Photo | Description |
|---|---|---|
| KFBK 160 |  | Filter boxes for round ducts |
| KFBT 160 G4 | 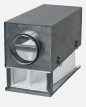 | Filter boxes with pocket filters for round ducts |

| | | |
|---|---|---|
| KFBT 160 F5 |  | Filter boxes with pocket filters for round ducts |
| KFBT 160 F7 |  | Filter boxes with pocket filters for round ducts |

### For round ducts

| Name | Photo | Description |
|---|---|---|
| VRV 160 |  | Backdraft dampers with spring for round ducts |
| VKA 160 |  | Air dampers for round ducts |

### Water heaters

| Name | Photo | Description |
|---|---|---|
| WKH 160-2 |  | Duct water heaters for round ducts |
| WKH 160-4 |  | Duct water heaters for round ducts |

### Electrical heaters

| Name | Photo | Description |
|---|---|---|
| EKH 160-1.2 |  | Duct electrical heaters for round ducts |
| EKH 160-1.7 |  | Duct electrical heaters for round ducts |
| EKH 160-2.0 |  | Duct electrical heaters for round ducts |
| EKH 160-2.4 |  | Duct electrical heaters for round ducts |
| EKH 160-3.4 |  | Duct electrical heaters for round ducts |

| | | |
|---|---|---|
| EKH 160-3.6 |  | Duct electrical heaters for round ducts |
| EKH 160-5.1 |  | Duct electrical heaters for round ducts |
| EKH 160-6.0 |  | Duct electrical heaters for round ducts |

### EC motors regulators

| Name | Photo | Description |
|---|---|---|
| CDT E/0-10 |  | Speed control for EC motors |

### Fittings

| Name | Photo | Description |
|---|---|---|
| K 160 |  | Clamp for round flexible ducts |