

# Primo 400 (220/60 Hz)

Mixed-flow inline fans

- Impeller type: Mixed-flow
- Casing material: Polypropylene
- Installation in any position

| | Unit of measurement | Primo 400 (220/60 Hz) | | |
|---|---|---|---|---|
| Speed | - | 1 | 2 | 3 |
| Phases | - | 1 | | |
| Minimum supply voltage | V | 230 | | |
| Maximum supply voltage | V | 230 | | |
| Power supply frequency | Hz | 60 | | |
| Weight | kg | 18.5 | | |
| Transported air temperature (max) | °C | 55 | | |
| Transported air temperature (min) | °C | -25 | | |
| Ingress protection rating | - | IPX4 | | |
| Ingress protection rating of the drive | - | IP20 | | |
| Impeller material | - | Plastic | | |

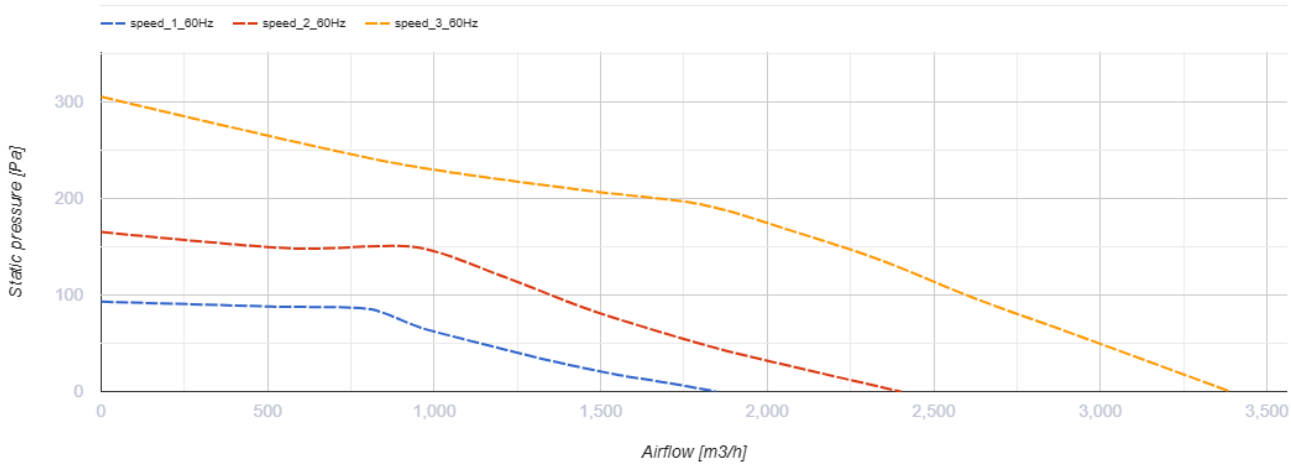


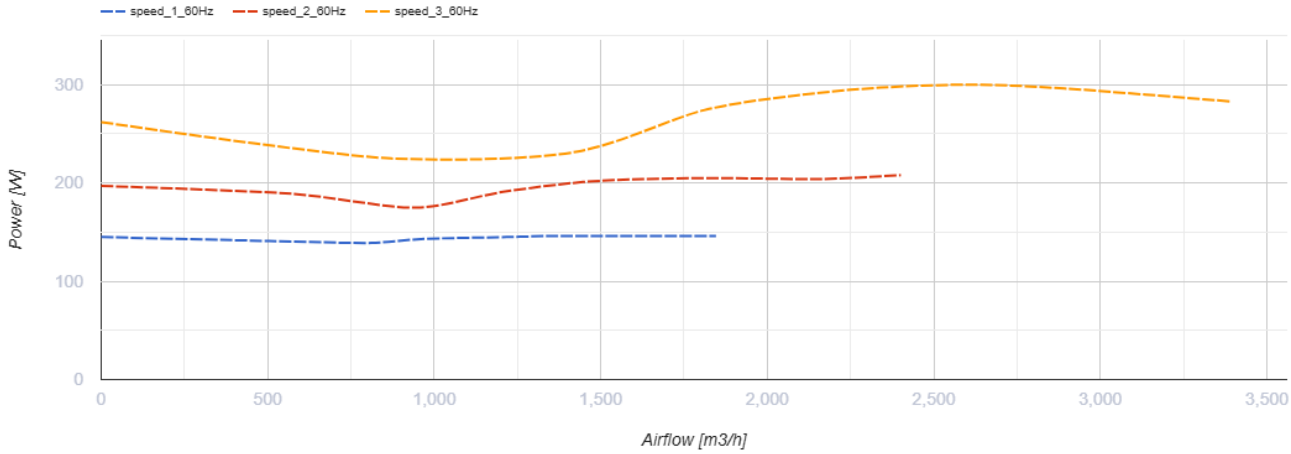


## Dimensions

| Ø D | Ø d | A | L | B | B1 | C | C1 |
|---|---|---|---|---|---|---|---|
| 451 | 395 | 496 | 415 | 513 | 623 | 482 | 484 |

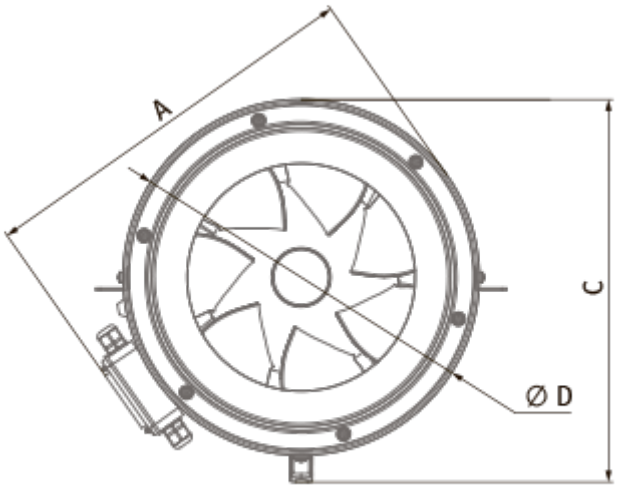
A
C
Ø D

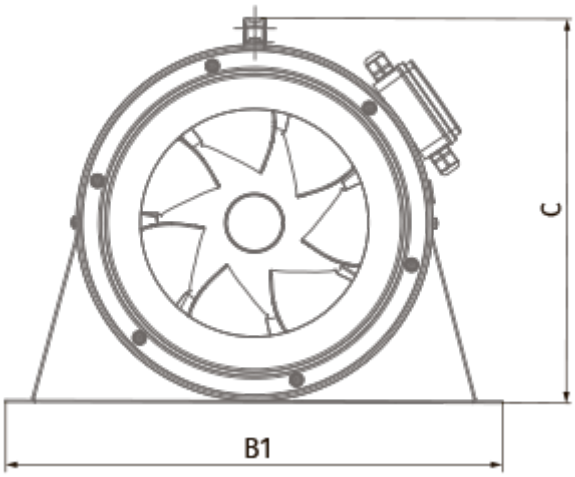
C
B1

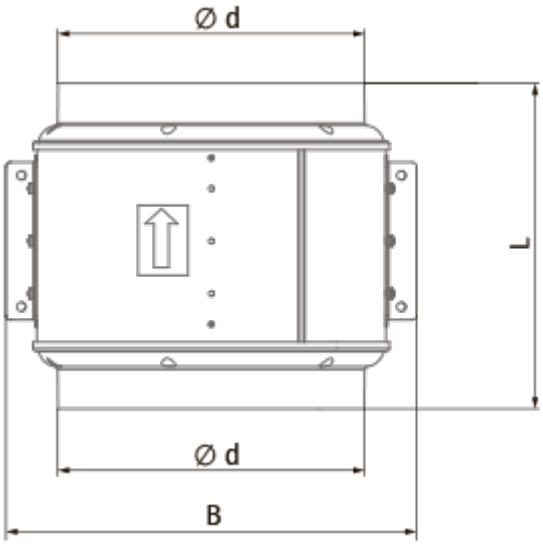
Ø d
L
Ø d
B

# Accessories

### For round ducts

| Name | Photo | Description |
|---|---|---|
| SD 400/900 |  | Silencers for round ducts |
| SD 400/1200 |  | Silencers for round ducts |

### For round ducts

| Name | Photo | Description |
|---|---|---|
| VKA 400 |  | Air dampers for round ducts |

### Speed controllers

| Name | Photo | Description |
|---|---|---|
| CDT E1.8 |  | Thyristor speed controller |
| CDT1 E1.5 |  | Multi-speed switches |
| CDTE E3.0 TP |  | Speed controllers |

### Speed control switches

| Name | Photo | Description |
|---|---|---|
| CDP-3/5 |  | Multi-speed switch |
| CDPE-3 E5 | | |