

Primo 400

Mixed-flow inline fans

- Impeller type: Mixed-flow
- Casing material: Polypropylene
- Installation in any position

	Unit of measurement	Primo 400		
Speed	-	1	2	3
Phases	-	1		
Minimum supply voltage	V	230		
Maximum supply voltage	V	230		
Power supply frequency	Hz	50		
Maximum airflow	m³/h	2677	3136	3350
Weight	kg	18.5		
Transported air temperature (max)	°C	55		
Transported air temperature (min)	°C	-25		
Ingress protection rating	-	IPX4		
Ingress protection rating of the drive	-	IP20		
Impeller material	-	Plastic		

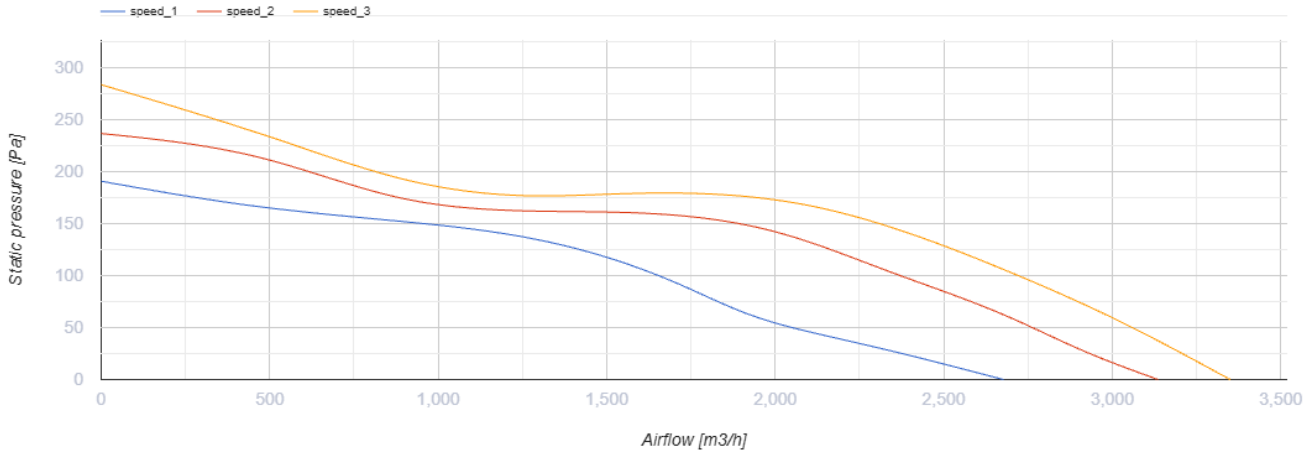

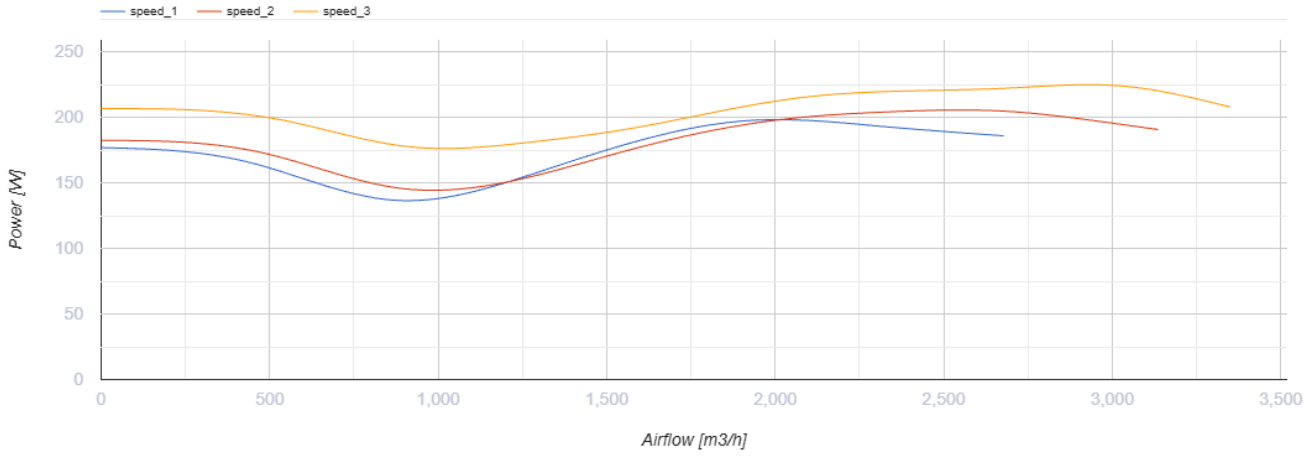

Dimensions

Ø D	Ø d	A	L	B	B1	C	C1
451	395	496	415	513	623	482	484

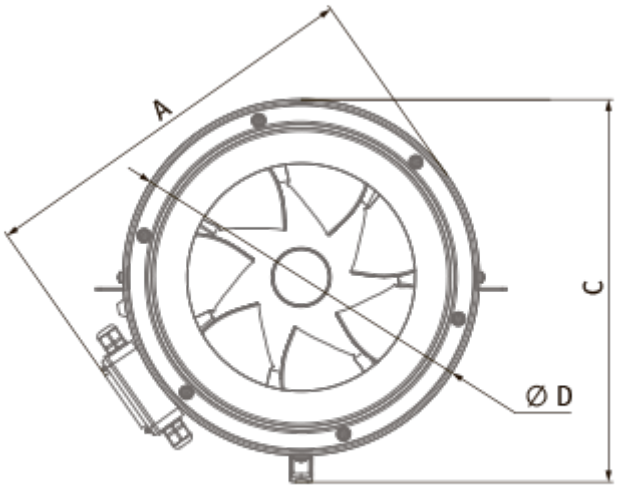
A
C
Ø D

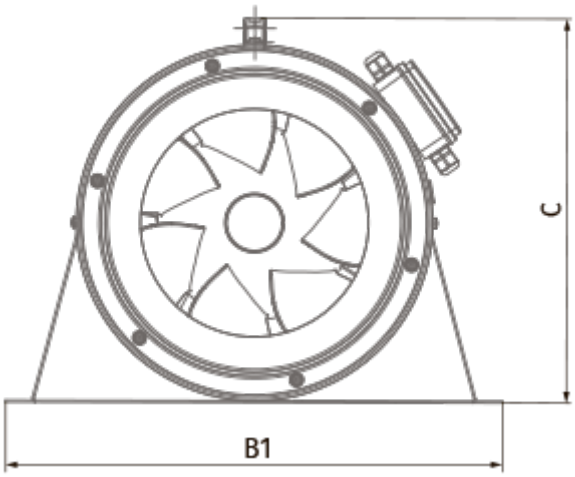
C
B1

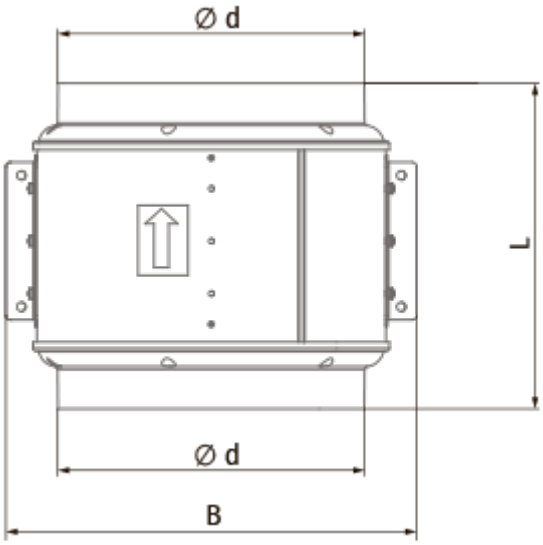
Ø d
L
Ø d
B

Ecodesign

Trademark	Blauberg
Model	Primo 400
Type of ventilation unit	Unidirectional
Type of drive installed	Integrated MSD
Type of heat recovery system	None
Nominal external pressure (Pa)	100
Maximum external leakage rates (%)	2.7
Static efficiency (%)	34.6
Declared typology	NRVU UVU
Effective electric power input (kW)	0.223
Sound power level (dB(A))	63

Accessories

For round ducts

Name	Photo	Description
SD 400/900		Silencers for round ducts
SD 400/1200		Silencers for round ducts

For round ducts

Name	Photo	Description
VKA 400		Air dampers for round ducts

Speed controllers

Name	Photo	Description
CDT E1.8		Thyristor speed controller

CDT1 E1.5		Multi-speed switches
CDTE E3.0 TP		Speed controllers

Speed control switches

Name	Photo	Description
CDP-3/5		Multi-speed switch
CDPE-3 E5		