

Primo 355

Mixed-flow inline fans

- Impeller type: Mixed-flow
- Casing material: Polypropylene
- Installation in any position

	Unit of measurement	Primo 355		
Speed	-	1	2	3
Phases	-	1		
Minimum supply voltage	V	230		
Maximum supply voltage	V	230		
Power supply frequency	Hz	50		
Maximum airflow	m³/h	2090	2296	2485
Weight	kg	15		
Transported air temperature (max)	°C	55		
Transported air temperature (min)	°C	-25		
Ingress protection rating	-	IPX4		
Ingress protection rating of the drive	-	IP20		
Impeller material	-	Plastic		

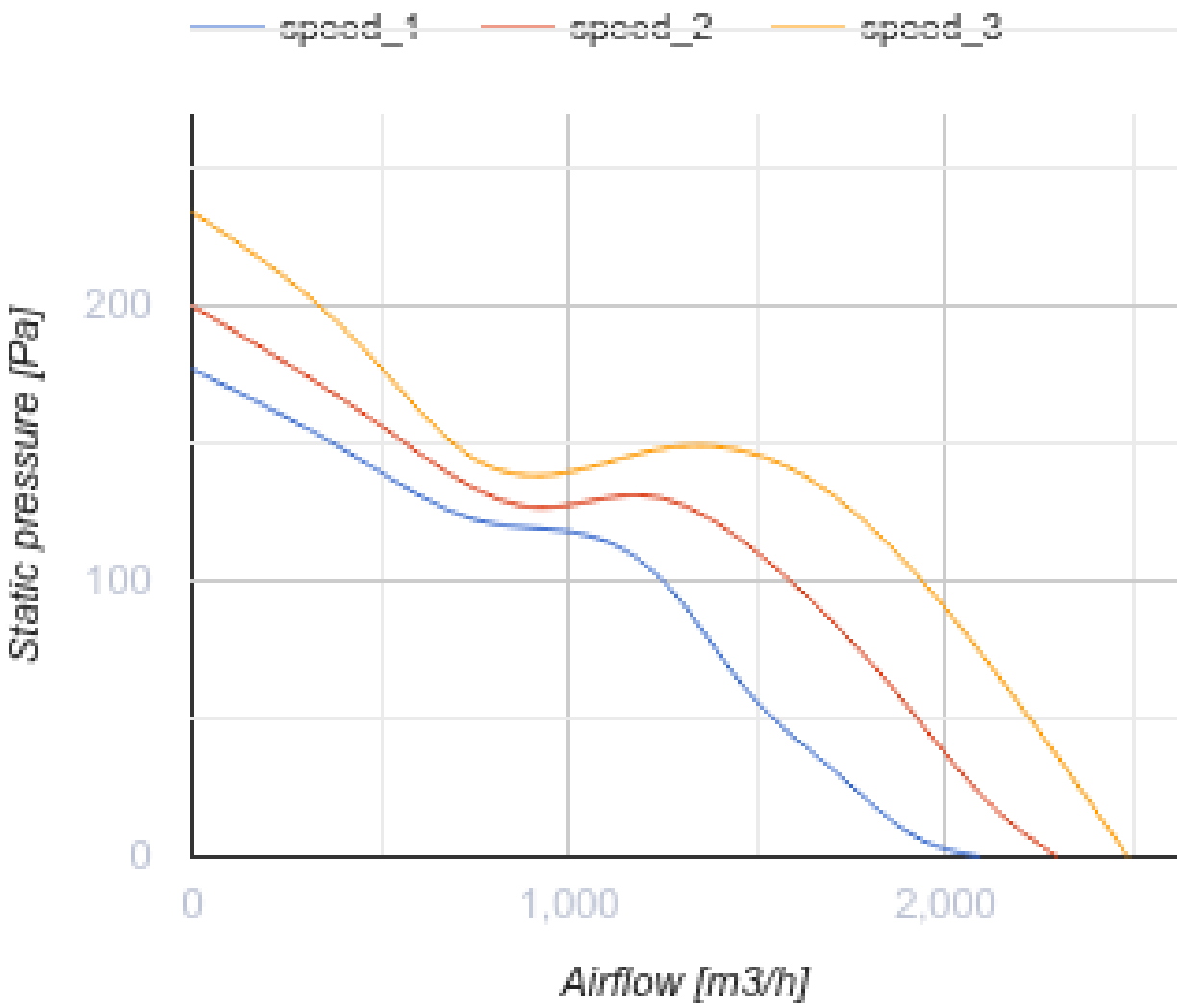
speed_1
speed_2
speed_3
Static pressure [Pa]
200
100
0
0
1,000
2,000
Airflow [m3/h]

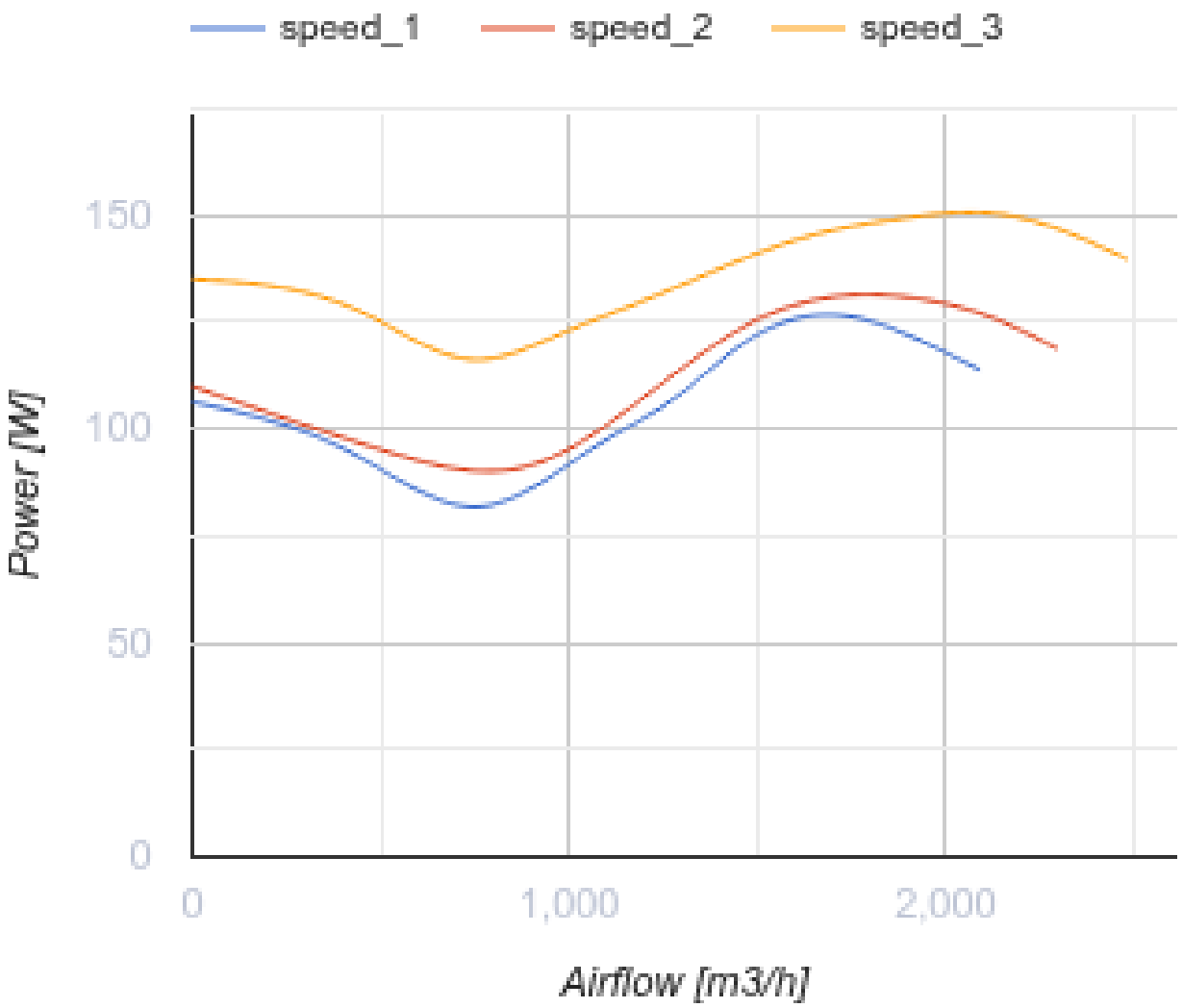

Dimensions

Ø D	Ø d	A	L	B	B1	C	C1
406	350	451	372	468	566	437	439

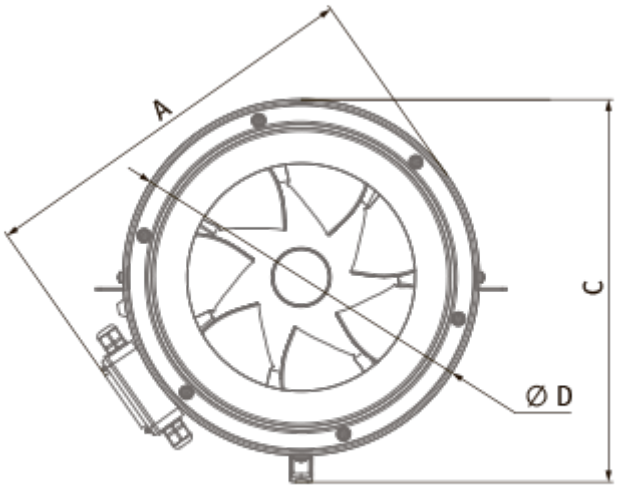
A
C
Ø D

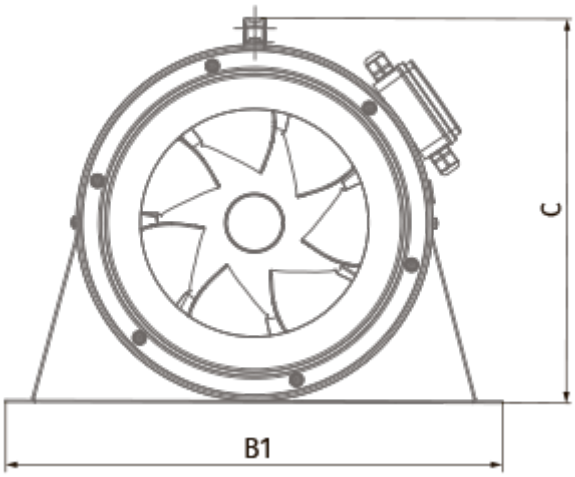
C
B1

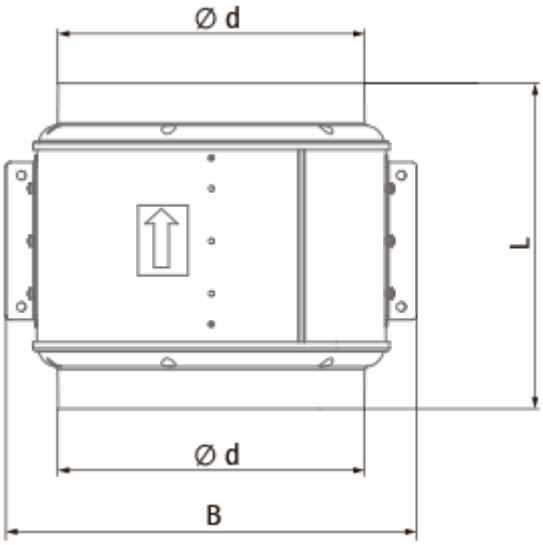
Ø d
L
Ø d
B

Ecodesign

Trademark	Blauberg
Model	Primo 355
Type of ventilation unit	Unidirectional
Type of drive installed	Integrated MSD
Type of heat recovery system	None
Nominal external pressure (Pa)	100
Maximum external leakage rates (%)	2.7
Static efficiency (%)	37.2
Declared typology	NRVU UVU
Effective electric power input (kW)	0.15
Sound power level (dB(A))	63

Accessories

For round ducts

Name	Photo	Description
SD 355/600		Silencers for round ducts
SD 355/900		Silencers for round ducts
SD 355/1200		Silencers for round ducts

For round ducts

Name	Photo	Description
VKA 355		Air dampers for round ducts

Speed controllers

Name	Photo	Description

CDT E1.8		Thyristor speed controller
CDT1 E1.5		Multi-speed switches
CDTE E3.0 TP		Speed controllers

Speed control switches

Name	Photo	Description
CDP-3/5		Multi-speed switch
CDPE-3 E5		