

O2 black

Axial extract fans with intelligent control

- Lighting
- Control: Built-in control panel
- Impeller type: Axial
- Motion sensor
- Humidity sensor: Built-in
- Temperature sensor: Built-in
- Timer: Turn off timer, Turn on timer

	Unit of measurement	O2 black	
Minimum supply voltage	V	100	
Maximum supply voltage	V	240	
Power supply frequency	Hz	50	60
Maximum airflow	m³/h	115	140
Ambient air temperature min	°C	1	
Ambient air temperature max	°C	40	
Ingress protection rating	-	IP44 Zone 1	

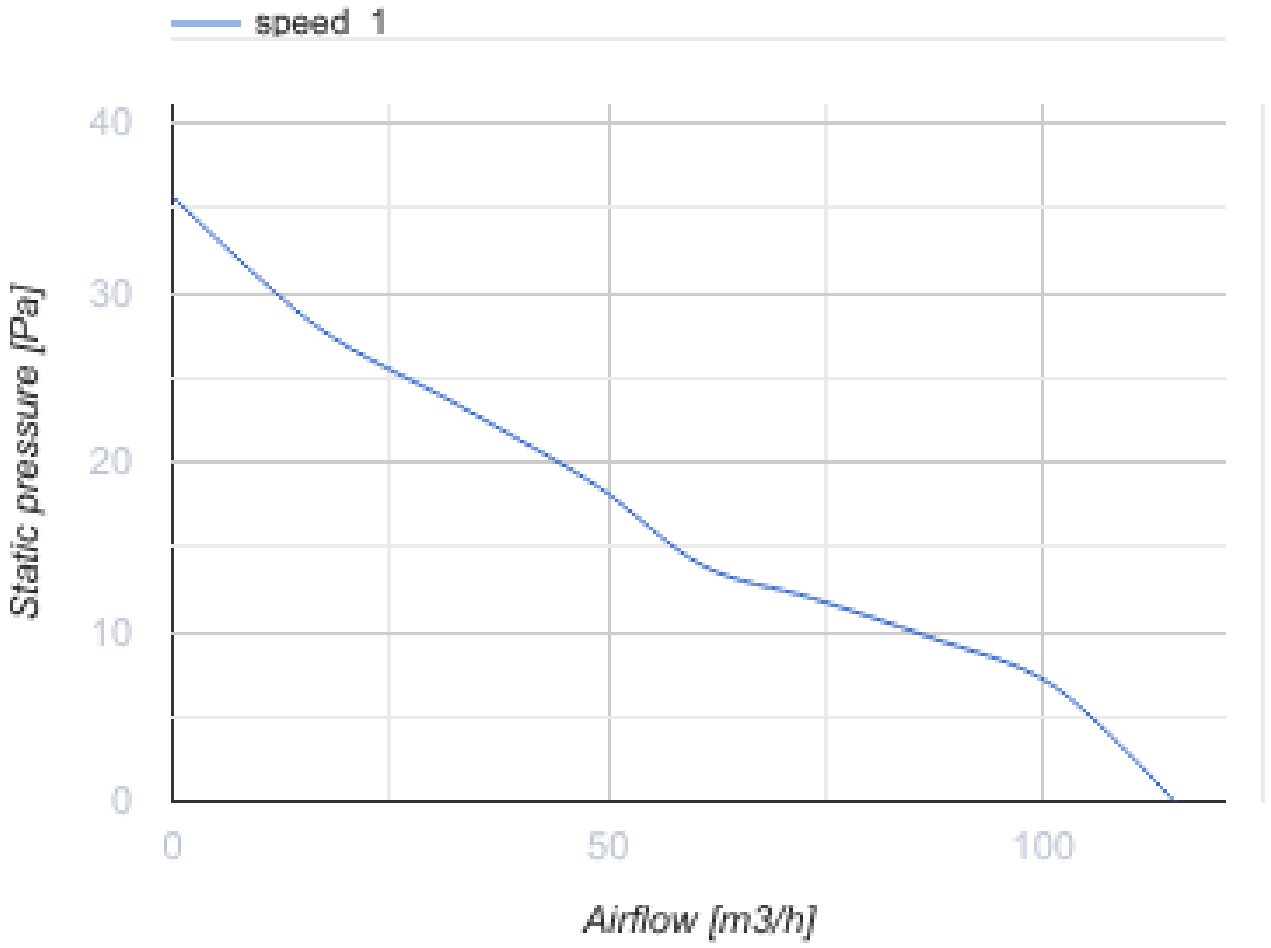
speed 1
40
30
20
10
0
Static pressure [Pa]
0
50
100
Airflow [m3/h]

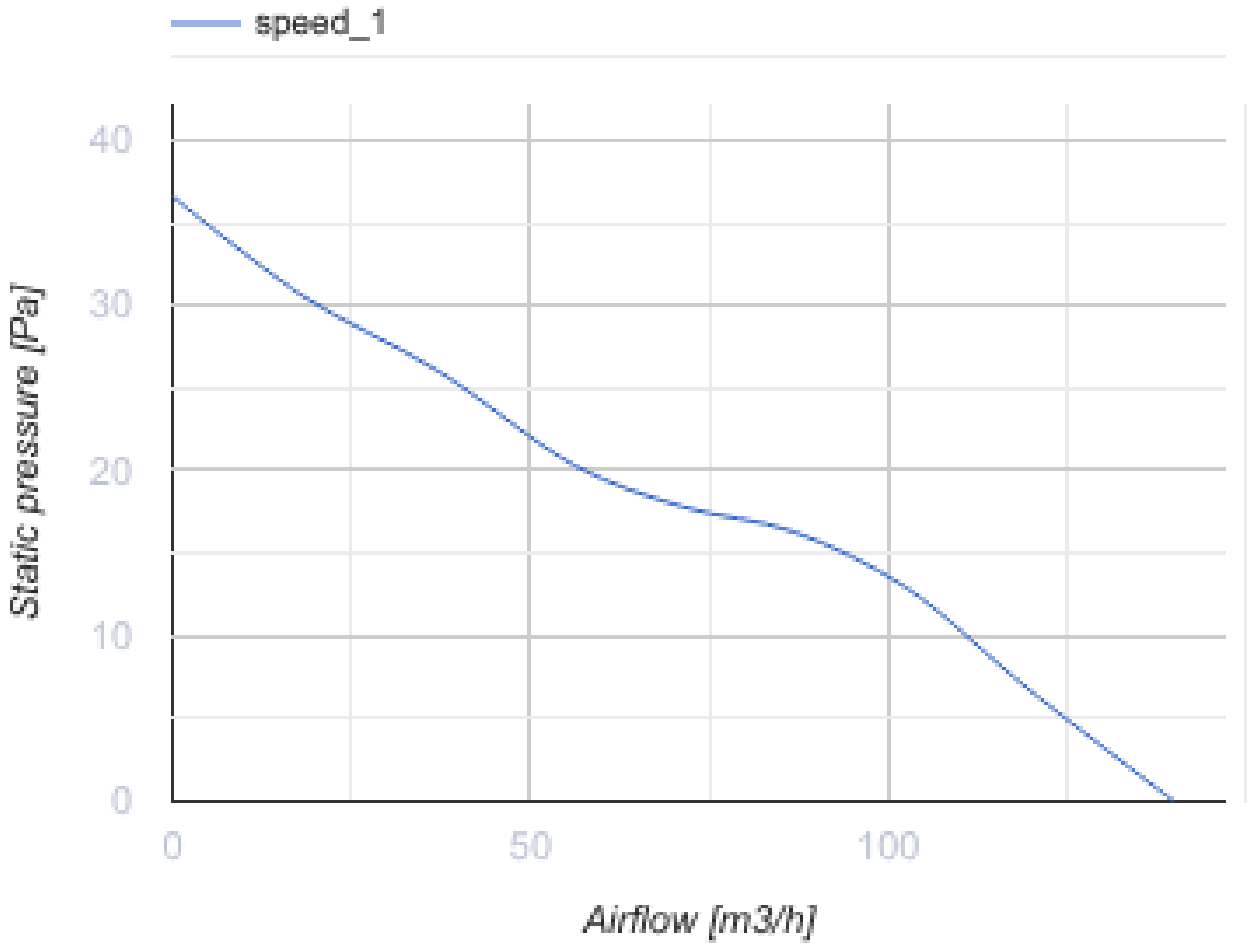
speed_1
40
30
20
10
0
Static pressure [Pa]
0
50
100
Airflow [m3/h]

Dimensions

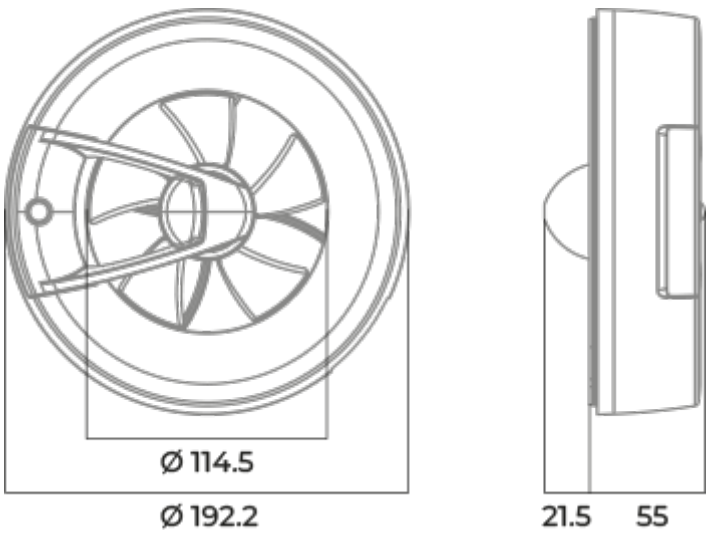
Ø 114.5
Ø 192.2
21.5
55

Ecodesign

Trademark	Blauberg					
Model	O2 black					
Specific energy consumption (SEC) (kWh/(m²/a))	Cold		Average		Warm	
	55.1	A+	28.1	B	12.6	E
Type of ventilation unit	Unidirectional					
Type of drive installed	Variable speed					
Type of heat recovery system	None					
Maximum flow rate (m³/h)	140					
Electric power input (W)	2.9					
Reference flow rate (m³/s)	0.025					
Specific power input (SPI) (W/(m³/h))	0.018					
Control typology	Local demand control					
Maximum external leakage rates (%)	2.7					
Declared typology	RVU UVU					
Sound power level (dB(A))	42					
The annual heating saved (AHS) (kWh/a)	Cold		Average		Warm	
	5536		2830		1280	

Accessories

Flat duct

Name	Photo	Description
BlauPlast RTR 100/0.35-0.5		Round telescopic duct
BlauPlast RTR 125/0.35-0.5		Round telescopic duct

Plastic

Name	Photo	Description
Decor 155x155s		Plastic grilles for supply and exhaust ventilation

Decor 185x185s		Plastic grilles for supply and exhaust ventilation

Hoods

Name	Photo	Description
Decor S 137x137/102HK		Metal hoods
Decor S 167x167/122HK		Metal hoods
Decor 185x185H		Plastic hoods
Decor 155x155H		Plastic hoods