

KZ 315

Clamps for round ducts

- Casing material: Galvanized steel

	Unit of measurement	KZ 315
Weight	kg	0.65

Dimensions

ØD	H
315	380

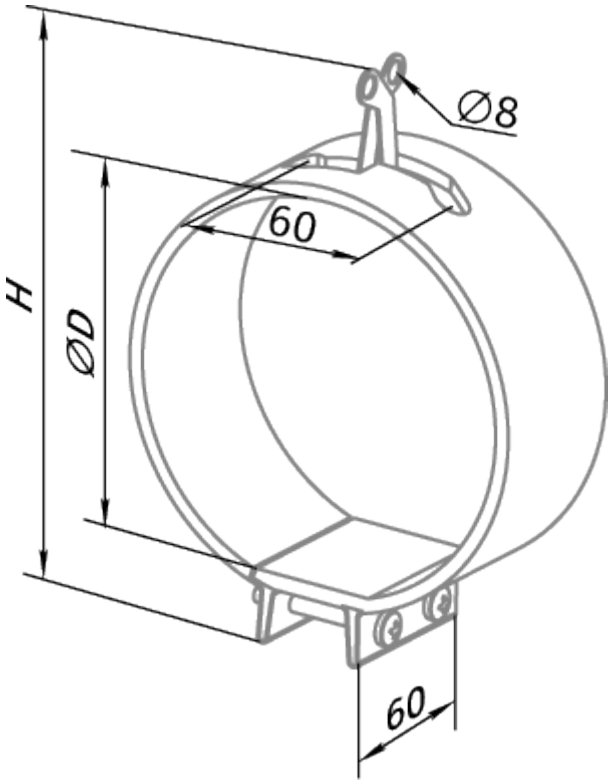
Ø8
60
H
ØD
60