

KZ 250

Clamps for round ducts

- Casing material: Galvanized steel

	Unit of measurement	KZ 250
Weight	kg	0.55

Dimensions

ØD	H
250	326

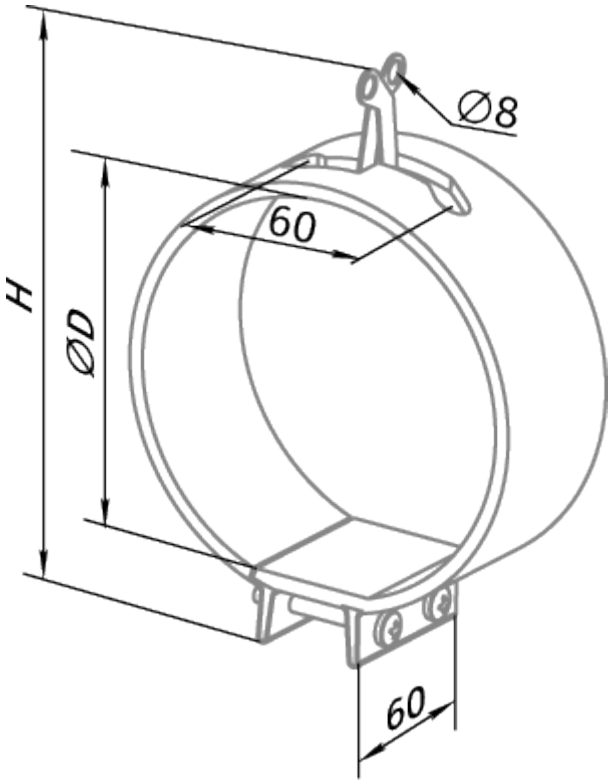
Ø8
60
H
ØD
60