

KZ 200

Clamps for round ducts

- Casing material: Galvanized steel

	Unit of measurement	KZ 200
Weight	kg	0.42

Dimensions

ØD	H
200	274

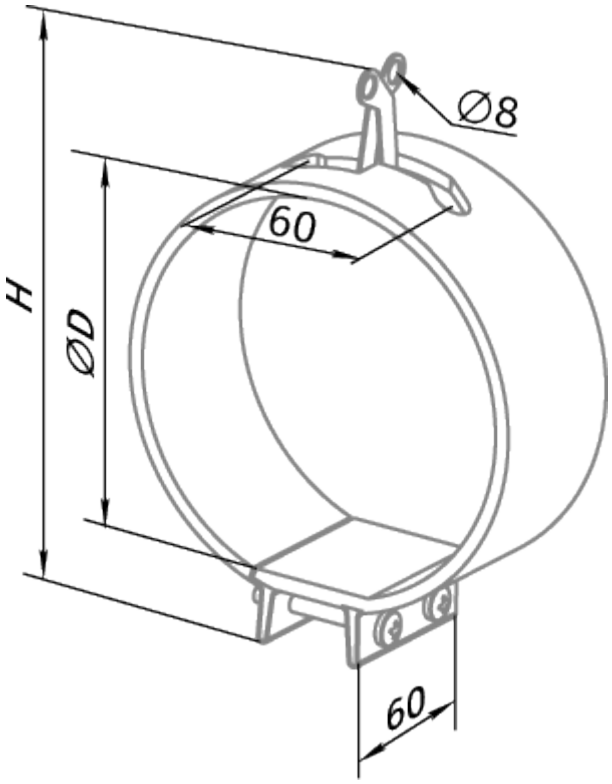
Ø8
60
H
ØD
60