

KZ 125

Clamps for round ducts

- Casing material: Galvanized steel

	Unit of measurement	KZ 125
Weight	kg	0.232

Dimensions

ØD	H
125	198

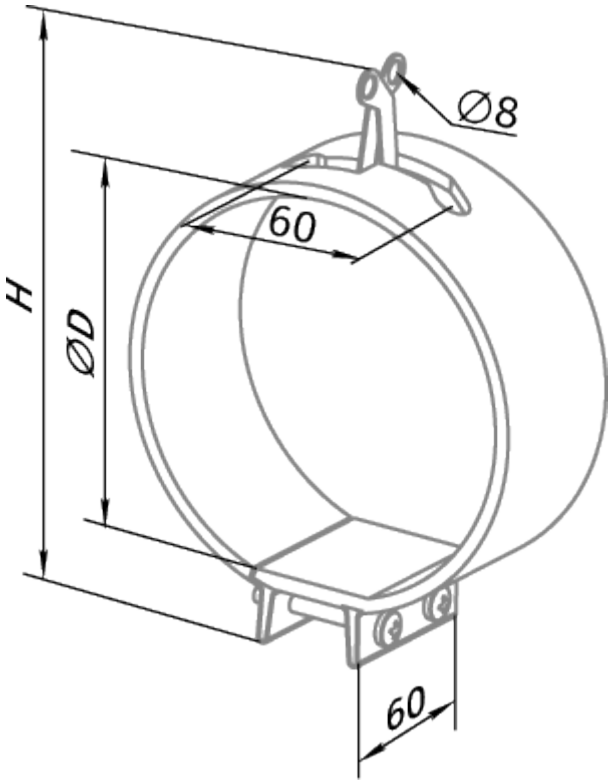
Ø8
60
H
ØD
60